Keysight N6705 DC Power Analyzer

Service Guide

KEYSIGHT TECHNOLOGIES

Legal Notices

Copyright Notice

© Keysight Technologies 2007 - 2015

No part of this manual may be reproduced in any form or by any means (including electronic storage and retrieval, or translation into a foreign language) without prior agreement and written consent from Keysight Technologies, Inc. as governed by United States and international copyright laws.

Manual Part Number

Manual Part Number: N6705-90010

Edition

Edition 10, January 2015

Printed In:

Printed in Malaysia.

Published by

Keysight Technologies, Inc.
550 Clark Drive
Budd Lake, NJ 07828 USA

Technology Licenses

The hardware and or software described in this document are furnished under a license and may be used or copied only in accordance with the terms of such license.

Declaration of Conformity

Declarations of Conformity for this product and for other Keysight products may be downloaded from the Web. Go to http://www.keysight.com/go/conformity and click on "Declarations of Conformity." You can then search by product number to find the latest Declaration of Conformity.

U.S. Government Rights

The Software is "commercial computer software," as defined by Federal Acquisition Regulation ("FAR") 2.101. Pursuant to FAR 12.212 and 27.405-3 and Department of Defense FAR Supplement ("DFARS") 227.7202, the U.S. government acquires commercial computer software under the same terms by which the software is customarily provided to the public. Accordingly, Keysight provides the Software to U.S. government customers under its standard commercial license, which is embodied in its End User License Agreement (EULA), a copy of which can be found at www.keysight.com/find/sweula. The license set forth in the EULA represents the exclusive authority by which the U.S. government may use, modify, distribute, or disclose the Software. The EULA and the license set forth therein, does not require or permit, among other things, that Keysight: (1) Furnish technical information related to commercial computer software or commercial computer software documentation that is not customarily provided to the public; or (2) Relinquish to, or otherwise provide, the government rights in excess of these rights customarily provided to the public to use, modify, reproduce, release, perform, display, or disclose commercial computer software or commercial computer software documentation. No additional government requirements beyond those set forth in the EULA shall apply, except to the extent that those terms, rights, or licenses are explicitly required from all providers of commercial computer software pursuant to the FAR and the DFARS and are set forth specifically in writing elsewhere in the EULA. Keysight shall be under no obligation to update, revise or otherwise modify the Software. With respect to any technical data as defined by FAR 2.101, pursuant to FAR 12.211 and 27.404.2 and DFARS 227.7102, the U.S. government acquires no greater than Limited Rights as defined in FAR 27.401 or DFAR 227.7103-5 (c), as applicable in any technical data.

Warranty

THE MATERIAL CONTAINED IN THIS DOCUMENT IS PROVIDED "AS IS," AND IS SUBJECT TO BEING CHANGED, WITHOUT NOTICE, IN FUTURE EDITIONS. FURTHER, TO THE MAXIMUM EXTENT PERMITTED BY APPLICABLE LAW, KEYSIGHT DISCLAIMS ALL WARRANTIES, EITHER EXPRESS OR IMPLIED, WITH REGARD TO THIS MANUAL AND ANY INFORMATION CONTAINED HEREIN, INCLUDING BUT NOT LIMITED TO THE IMPLIED WARRANTIES OF MERCHANTABILITY AND FITNESS FOR A PARTICULAR PURPOSE. KEYSIGHT SHALL NOT BE LIABLE FOR ERRORS OR FOR INCIDENTAL OR CONSEQUENTIAL DAMAGES IN CONNECTION WITH THE FURNISHING, USE, OR PERFORMANCE OF THIS DOCUMENT OR OF ANY INFORMATION CONTAINED HEREIN. SHOULD KEYSIGHT AND THE USER HAVE A SEPARATE WRITTEN AGREEMENT WITH WARRANTY TERMS COVERING THE MATERIAL IN THIS DOCUMENT THAT CONFLICT WITH THESE TERMS, THE WARRANTY TERMS IN THE SEPARATE AGREEMENT SHALL CONTROL.

Waste Electrical and Electronic Equipment (WEEE) Directive 2002/96/EC

This product complies with the WEEE Directive 2002/96/EC) marketing requirement. The affixed product label (see below) indicates that you must not discard this electrical/electronic product in domestic household waste.

Product Category: With reference to the equipment types in the WEEE directive Annex 1, this product is classified as "Monitoring and Control instrumentation" product.

Do not dispose in domestic household waste.

To return unwanted products, contact your local Keysight office, or see http://about.keysight.com/en/companyinfo/environment/takeback.shtml for more information.

.

Safety Notices

The following general safety precautions must be observed during all phases of operation of this instrument. Failure to comply with these precautions or with specific warnings or instructions elsewhere in this manual violates safety standards of design, manufacture, and intended use of the instrument. Keysight Technologies assumes no liability for the customer's failure to comply with these requirements.

General

Do not use this product in any manner not specified by the manufacturer. The protective features of this product may be impaired if it is used in a manner not specified in the operation instructions.

Before Applying Power

Verify that all safety precautions are taken. Make all connections to the unit before applying power. Note the instrument's external markings described under "Safety Symbols"

Ground the Instrument

This product is a Safety Class 1 instrument (provided with a protective earth terminal). To minimize shock hazard, the instrument chassis and cover must be connected to an electrical ground. The instrument must be connected to the ac power mains through a grounded power cable, with the ground wire firmly connected to an electrical ground (safety ground) at the power outlet. Any interruption of the protective (grounding) conductor or disconnection of the protective earth terminal will cause a potential shock hazard that could result in personal injury.

Fuses

The instrument contains an internal fuse, which is not customer accessible.

Do Not Operate in an Explosive Atmosphere

Do not operate the instrument in the presence of flammable gases or fumes.

Do Not Remove the Instrument Cover

Only qualified, service-trained personnel who are aware of the hazards involved should remove instrument covers. Always disconnect the power cable and any external circuits before removing the instrument cover.

Do Not Modify the Instrument

Do not install substitute parts or perform any unauthorized modification to the product. Return the product to a Keysight Sales and Service Office for service and repair to ensure that safety features are maintained.

In Case of Damage

Instruments that appear damaged or defective should be made inoperative and secured against unintended operation until they can be repaired by qualified service personnel.

Safety Information

CAUTION

A **CAUTION** notice denotes a hazard. It calls attention to an operating procedure, practice, or the like that, if not correctly performed or adhered to, could result in damage to the product or loss of important data. Do not proceed beyond a **CAUTION** notice until the indicated conditions are fully understood and met.

WARNING

A WARNING notice denotes a hazard. It calls attention to an operating procedure, practice, or the like that, if not correctly performed or adhered to, could result in personal injury or death. Do not proceed beyond a WARNING notice until the indicated conditions are fully understood and met.

Safety Symbols

⎓	Direct current
∼	Alternating current
≂	Both direct and alternating current
3∼	Three phase alternating current
⏚	Earth (ground) terminal
⏚	Protective earth ground terminal.
⏚	Frame or chassis terminal
⊥	Terminal is at earth potential.
N	Neutral conductor on permanently installed equipment
L	Line conductor on permanently installed equipment.
|	On supply
○	Off supply
⏻	Standby supply. Unit is not completely disconnected from ac mains when switch is off
▭	In position of a bi-stable push switch
□	Out position of a bi-stable push switch
⚠	Caution, risk of electric shock
⚠	Caution, hot surface
⚠	Caution, refer to accompanying description

Contents

1 - Introduction 5
Returning an Instrument 6
Instrument Identification 6
Firmware Upgrade 7

2 - Performance Verification 9
Verification Description 10
Verification Procedure 13
Test Record Forms 22

3 - Calibration 43
Calibration Description 44
Calibration Procedure – Models N673xB, N674xB, N677xA 46
Calibration Procedure – Models N675xA 49
Calibration Procedure – Models N676xA 53
Calibration Procedure – Models N678xA SMU 62
Calibration Procedure – Models N6783A-BDA and -MFG 76
Change the Admin/Calibration Password 80

4 - Disassembly 81
Electrostatic Discharge (ESD) Precautions 82
Disassembly Procedures 82

5 - Troubleshooting 105
Preliminary Checkout 106
General Troubleshooting 107
Bias PCA Troubleshooting 112
Backplane PCA Troubleshooting 114
Calibration and Passwords 115
Initialization 115

6 - Replaceable Parts 117
Parts List 118
Parts Location Diagrams 120

Appendix A - Error Messages 125
Displaying Error Messages 126
Error List 126

Index 133

1
Introduction

Returning an Instrument 6
Instrument Identification 6
Firmware Upgrade 7

This manual discusses the verification and calibration procedures for the Keysight N6705 DC Power Analyzer mainframe.

No procedures are provided for troubleshooting individual modules - other than identifying if a specific module is defective. If you have a defective module, you can return it to Keysight Technologies for repair or replacement. Refer to the following note.

NOTE

You can contact Keysight Technologies at one of the following telephone numbers for warranty, service, or technical support information.
In the United States: (800) 829-4444
In Europe: 31 20 547 2111
In Japan: 0120-421-345
Or use our Web link for information on contacting Keysight in your country or specific location: www.keysight.com/find/assist
Or contact your Keysight Technologies Representative.

The web contains the most up to date version of the manuals. Go to http://www.keysight.com/find/N6705 to get the latest version of the manuals.

Returning an Instrument

Before returning your instrument to Keysight Technologies for service or repair, perform the “Preliminary Checkout” procedures in the beginning of chapter 5.

Warranty Repair

If your instrument fails during the warranty period, Keysight Technologies will replace or repair it free of charge. After your warranty expires, Keysight Technologies will replace or repair it at a competitive price. The standard repair process is “assembly level repair” for the mainframe and “whole unit exchange” for the DC power supply modules. The replacement units are fully refurbished and are shipped with new calibration certificates.

Contact your nearest Keysight Technologies Service Center. They will arrange to have your instrument repaired or replaced.

Repackaging for Shipment

If the unit is to be shipped to Keysight Technologies for service or repair, be sure to:

- Attach a tag to the unit identifying the owner and indicating the required service or repair. Include the model and serial number.
- Place the unit in its original container with the appropriate packaging material and secure the container with strong tape or metal bands.

If the original shipping container is not available, place your unit in a container that will ensure at least 4 inches of compressible packaging material around all sides for the instrument. Use static-free packaging materials to avoid additional damage to your unit.

Keysight Technologies suggests that you always insure shipments.

Instrument Identification

Serial Number

Keysight N6705 mainframes are identified by the serial number located on the back of the instrument.

The serial number consists of a 10-character number such as MY24D00013. The first two characters indicate the country of manufacture, and the last five digits are a sequential number assigned to each mainframe.

Additional Information

For Keysight N6705 mainframes, you can query the model number, serial number, firmware revision, backup and active firmware.

For power modules, you can query the model number, serial number, installed options, voltage, current and power rating.

Front Panel:	SCPI Command:

Press the [Settings] key, then select the Ratings button on the bottom of the screen.	For mainframe information:
	`*IDN?`
	For information about the power module in channel 1:
	`SYST:CHAN:MOD? (@1)`
	`SYST:CHAN:OPT? (@1)`
	`SYST:CHAN:SER? (@1)`

Firmware Upgrade

You can query the instrument's firmware revision either from the front panel or over the remote interface as described under "Additional Information".

To upgrade your instrument with the latest firmware revision, go to http://www.keysight.com/find/N6705firmware. The upgrade procedure consists of the following steps:

1. Download and unzip the Keysight N6705 Firmware Update file located under "Documents & Downloads" at the bottom of the Web page. Make a note of where you saved the unzipped file.
2. Download and install the Keysight N6705 Firmware Update Utility located under "Documents & Downloads" at the bottom of the Web page. (Skip this step if the utility is already installed.)
3. Run the Keysight N6705 Firmware Update Utility. Select **Start** > **Programs** > **Keysight** > **Firmware Update Utility**. Then click **Next**.
4. Click the **Browse** button and locate the firmware update file (in .xs file format) that you unzipped in step 1. Highlight the file and click **Open**.
5. Under Applicable Model, select the model number of the mainframe that is being updated (N6705B). Then click **Next**.
6. Select the I/O interface (GPIB, LAN, or USB) that connects your N6705 mainframe to your PC. Then click **Next**.
7. Choose the settings necessary for communication (GPIB address, IP address, USB ID). Then click **Update**.
8. Cycle power to the N6705 mainframe. The new firmware will be running in the N6705 mainframe when power is reapplied.

2
Performance Verification

Verification Description 10
Verification Procedure 13
Test Record Forms 22

The verification procedures described in this chapter verify that the Keysight N6705 DC Power Analyzer is operating normally and is within published specifications.

NOTE Perform the verification tests before calibrating your DC Power Analyzer. If the DC Power Analyzer passes the verification tests, the unit is operating within its calibration limits and does not need to be re-calibrated.

Verification procedures perform two primary functions:

Performance Tests These tests verify that the DC Power Analyzer is operating normally and meets the specifications published in the Keysight N6700 Modular Power System Family Specifications Guide.

Calibration Tests These tests verify that the DC Power Analyzer is operating within its calibration limits.

If the instrument fails any of the tests or if abnormal test results are obtained, try calibrating the unit. If calibration is unsuccessful, return the unit to a Keysight Technologies Service Center.

KEYSIGHT TECHNOLOGIES

Verification Description

Verification and Calibration Equipment Required

The equipment listed in the following table, or the equivalent to this equipment, is required for the performance tests and for calibration. Test record sheets are included at the back of this section.

Type	Specifications	Recommended Model
Digital Multimeter	Resolution: 10 nV @ 1V; Readout: 8 1/2 digits Accuracy: 20 ppm	Keysight 3458A or equivalent
Current Monitor	15 A (0.1 ohm), TC = 4ppm/°C 30 A (0.1 ohm), TC = 4ppm/°C 50 A (0.05 ohm), TC = 4ppm/°C	Guildline 9230A-15R Guildline 9230A-30 Guildline 9230A-50
Load Resistors	25 Ω, 250 W, 1% (calibration, N6751A/52A; N6761A/62A) 4 Ω, 250 W, 1% (calibration, N6751A/52A; N6761A/62A) 20 kΩ, 1%, 1/8W (verification, calibration for 1UA/2UA) 10 Ω, 1%, 1/8W (verification, calibration for N678xA SMU) 10 kΩ, 1%, 1/8W (verification, calibration for N678xA SMU) 1 MΩ, 1%, 1/8W (verification, calibration for N678xA SMU)	Vishay NH-250-25Ω-1% Vishay NH-250-4Ω-1%
Electronic Load	150 V, 50 A minimum, with transient capability and a slew rate of 833 kA/s or better.	Keysight N3300A mainframe, with N330xA modules
Keysight N6784A	Load for N678xA SMU and N6783A (set to CC load mode)	Keysight N6784A
GPIB Controller	Full GPIB capabilities	Keysight 82350B or equivalent
Oscilloscope	Sensitivity: 1 mV; Bandwidth Limit: 20 MHz Probe: 1:1 with RF tip	Keysight Infiniium/6054A or equivalent
RMS Voltmeter	True RMS; Bandwidth: 20 MHz Sensitivity: 100 μV	Rhode and Schwartz Model URE3 or equivalent
Differential Amplifier	Bandwidth: 20 MHz	LeCroy 1855A or equivalent
Terminations	1 – 50 Ω BNC termination 2 – 50 Ω, 1/8 W termination resistors	
Variable voltage transformer or AC source	Adjustable to highest rated input voltage range. Power: 500 VA	Keysight 6813B or equivalent
RC – for N678xA transient test	Capacitor: 150 μF fixed film Resistor 50 mΩ	EPCOS B32526R0157K Vishay LVR01R0500FE70

Measurement Techniques

Voltmeter

To ensure that the values read by the voltmeter during both the verification procedure and the calibration procedure are not affected by the instantaneous measurement of the AC peaks of the output current ripple, make several DC measurements and average them.

If you are using a Keysight 3458A DMM, you can set up the voltmeter to do this automatically. From the instrument's front panel, program 100 power line cycles per measurement. Press NPLC 100 ENTER.

If you are using a Keysight 3458A DMM, turn on auto-calibration (ACAL) and the autorange function (ARANGE). For best results, auto-calibration should be performed every 24 hours when verifying or calibrating models N678xA SMU.

Current-Monitoring Resistor

The 4-terminal current shunt is used to eliminate output current measurement error caused by voltage drops in the load leads and connections. It has special current-monitoring terminals inside the load connection terminals. Connect the voltmeter directly to these current-monitoring terminals.

Electronic Load

Many of the test procedures require the use of a variable load capable of dissipating the required power. If a variable resistor is used, switches should be used to connect, disconnect, or short the load resistor. For most tests, an electronic load can be used. The electronic load is considerably easier to use than load resistors, but it may not be fast enough to test transient recovery time and may be too noisy for the noise (PARD) tests.

Fixed load resistors may be used in place of a variable load, with minor changes to the test procedures. Also, if computer controlled test setups are used, the relatively slow (compared to computers and system voltmeters) settling times and slew rates of the DC Power Analyzer may have to be taken into account. Use "Wait" statements in your program if the test system is faster than the DC Power Analyzer.

Note that an N6784A SMU power module should be used as the load when testing transient response on models N678xA SMU and N6783A.

Front Panel Connections

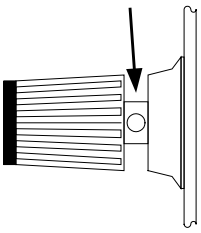

Except for Test Setup A, do not connect anything to the Sense terminals. Check the front panel 4 wire LED to see whether 4 wire sensing is enabled (LED is lit) or disabled (LED not lit). To change the 4 wire sense settings, press [Settings], then navigate to and select **Advanced**. Under Sense, select Local or 4 Wire sensing.

Connect all leads to the output terminals as shown in the figure to the left.

Verification Test Set-up

The following figures show the verification test set-ups. Connect all leads to the Output terminals as shown in the following figures. Twist the + and - load leads to reduce noise and inductance.

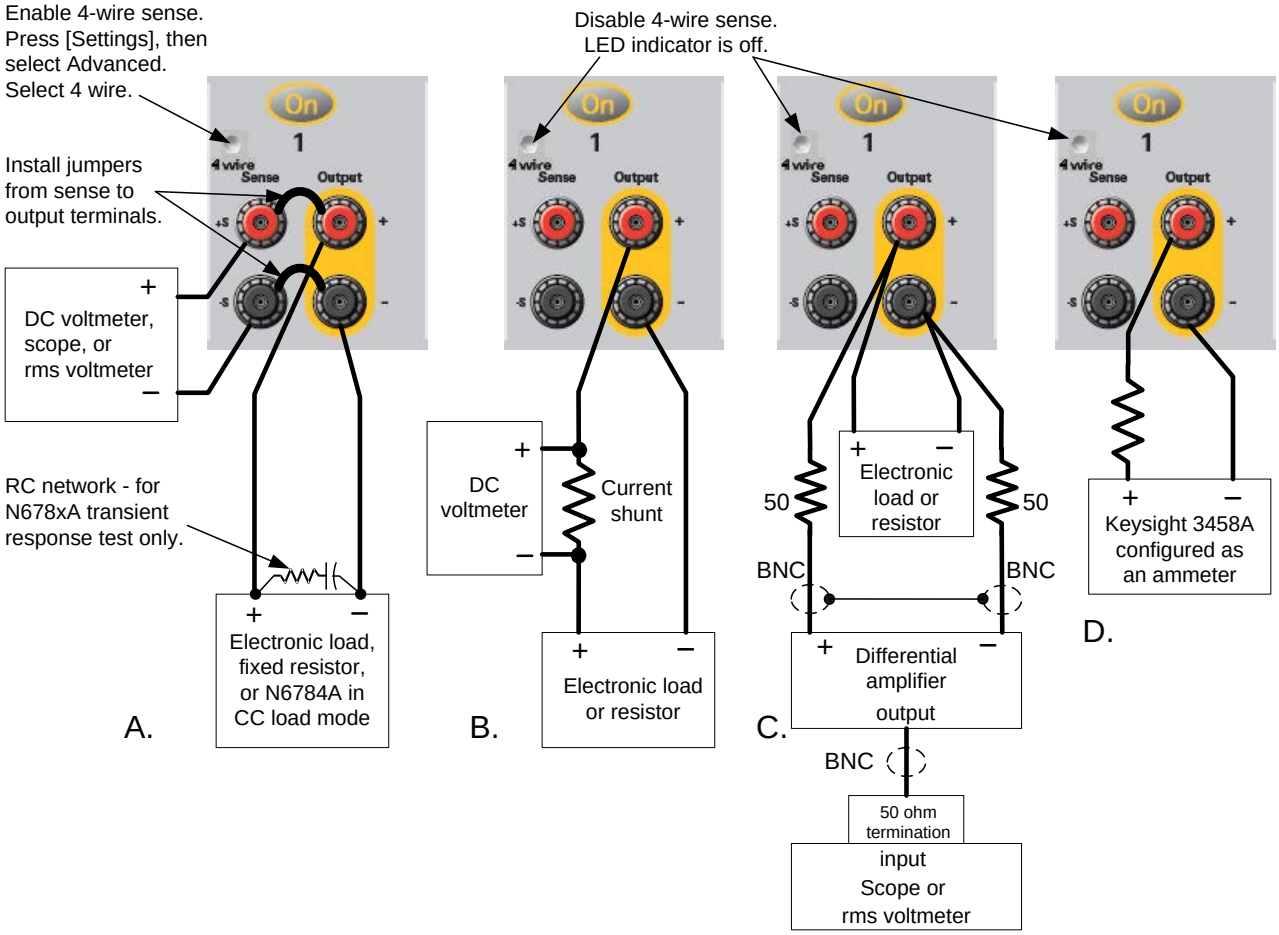

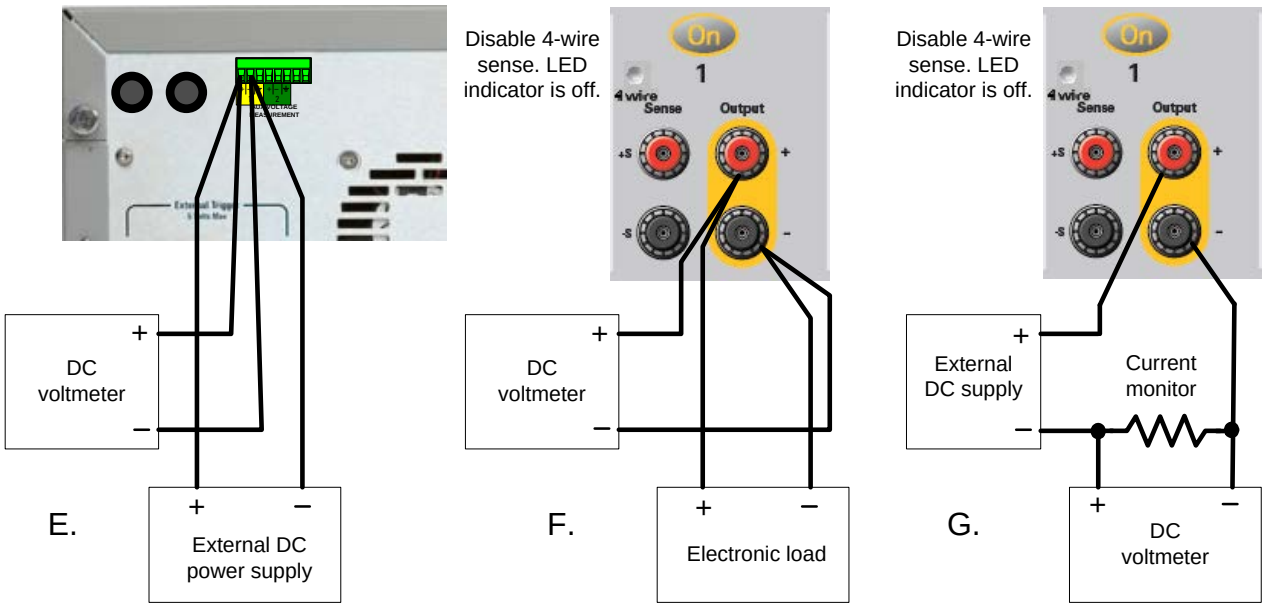

Verification Procedure

Constant Voltage Tests

NOTE Test each output channel individually. Refer to the appropriate test record form for the instrument settings of the model you are checking.

Voltage Programming and Readback Accuracy

Test category = performance, calibration

This test verifies that the voltage programming and measurement functions are within specifications.

1. Turn off the DC Power Analyzer and connect a DMM across the sense terminals (see Test Setup A). Do **not** connect the load.
2. Turn on the DC Power Analyzer and program the instrument settings as described in the test record form under “Voltage Programming & Readback, Min Voltage”. Turn the output on.
   The output status should be “CV” and the output current should be close to zero.
3. Record the output voltage reading from the DMM and the voltage measured over the interface. The readings should be within the limits specified in the test record form for the appropriate model under “Voltage Programming & Readback Minimum Voltage”.
4. Program the instrument settings as described in the test record form under “Voltage Programming & Readback High Voltage”.
5. Record the output voltage reading from the DMM and the voltage measured over the interface. The readings should be within the limits specified in the test record form for the appropriate model under “Voltage Programming & Readback High Voltage”.
6. *For models N6761A, N6762A, N6781A, N6782A, and N6784A only.* Set both the voltage programming and the voltage measurement to the low range (5.5 V for models N676xA; 6 V programming and 1 V measurement for models N678xA). Set the instrument as described under “Voltage Programming & Readback, Low Voltage”. Repeat step 5 for the low voltage range. The readings should be within the limits specified under “Voltage Programming & Readback Low Range”.
7. *For models N6781A, N6782A, and N6784A only.* Set the voltage programming to the 600 mV range and the voltage measurement to the 100 mV range. Set the instrument as described under “600 mV Programming & 100 mV Readback”. Repeat step 5. The readings should be within the limits specified under “600 mV Programming & 100 mV Readback”.
8. *For models N6763A – N6766A only.* Set the instrument as described under “Voltage Readback, Low Voltage”. Record the voltage measured over the interface. The reading should be within the limits specified under “Voltage Readback Low Range”.

CV Load Effect

Test category = performance

This test measures the change in output voltage resulting from a change in output current from full load to no load.

1. Turn off the DC Power Analyzer and connect a DMM and an electronic load (see Test Setup A).
2. Turn on the DC Power Analyzer and program the instrument settings as described in the test record form under “CV Load Effect”.
3. Set the electronic load for the output channel’s current as described in the test record form under “CV Load Effect”. The output status should be “CV”. If it isn’t, adjust the load so that the output current drops slightly.
4. Record the output voltage reading from the DMM.
5. Open the load. Record the voltage reading from the DMM again. The difference between the DMM readings in steps 4 and 5 is the load effect, which should not exceed the value listed in the test record form for the appropriate model under “CV Load Effect”.
6. *For models N6781A, N6782A, and N6784A only.* Repeat steps 2 through 5 for the 6 V range.

CV Source Effect (all models except N678xA SMU)

Test category = performance

This test measures the change in output voltage that results from a change in AC line voltage from the minimum to maximum value within the line voltage specifications.

1. Turn off the DC Power Analyzer and connect the ac power line through a variable voltage transformer or an AC source.
2. Connect a DMM and an electronic load (see Test Setup A). Set the transformer or AC source to nominal line voltage.
3. Turn on the DC Power Analyzer and program the instrument settings as described in the test record form under “CV Source Effect”.
4. Set the electronic load for the output channel’s current as described in the test record form under “CV Source Effect”. The output status should be “CV”. If it isn’t, adjust the load so that the output current drops slightly.
5. Adjust the AC input to the lowest rated line voltage (86 VAC).
6. Record the output voltage reading from the DMM.
7. Adjust the AC input to the highest rated line voltage (264 VAC).
8. Record the output voltage reading on the DMM. The difference between the DMM reading in steps 6 and 8 is the source effect, which should not exceed the value listed in the test record form for the appropriate model under “CV Source Effect”.

CV Ripple and Noise

Test category = performance

Periodic and random deviations in the output combine to produce a residual AC voltage superimposed on the DC output voltage. This residual voltage is specified as the rms or peak-to-peak noise in the frequency range specified in the Keysight N6700 Modular Power System Family Specifications Guide.

1. Turn off the DC Power Analyzer and connect a load resistor or electronic load, differential amplifier, and an oscilloscope (ac coupled) to the output (see Test Setup C).
2. *For models N6751A/52A, N6761A/62A, and N678xA SMU* - use an appropriate load resistor to keep the DC Power Analyzer at the instrument setting specified in the test record form under “CV Ripple and Noise”. For all other power modules - use an electronic load to keep the DC Power Analyzer at the instrument setting specified in the test record form under “CV Ripple and Noise”.
3. As shown in the diagram, use two BNC cables to connect the differential amplifier to the + and – output terminals. Each cable should be terminated by a 50 Ω resistor. The shields of the two BNC cables should be connected together. Connect the output of the differential amplifier to the oscilloscope with a 50 Ω termination at the input of the oscilloscope.
4. Set the differential amplifier to multiply by ten, divide by one, and 1 MΩ input resistance. The positive and negative inputs of the differential amplifier should be set to AC coupling. Set the oscilloscope’s time base to 5 ms/div, and the vertical scale to 10 mV/div. Turn the bandwidth limit on (usually 20 or 30 MHz), and set the sampling mode to peak detect.
5. Program the DC Power Analyzer to the settings indicated in the in the test record form for the appropriate model under “CV Ripple and Noise” and enable the output. Let the oscilloscope run for a few seconds to generate enough measurement points. On the Keysight Infiniium scope, the maximum peak-to-peak voltage measurement is indicated at the bottom of the screen on the right side. Divide this value by 10 to get the CV peak-to-peak noise measurement. The result should not exceed the peak-to-peak limits in the test record form for the appropriate model under “CV Ripple and Noise, peak-to-peak”.

NOTE

If the measurement contains any question marks, clear the measurement and try again. This means that some of the scope data received was questionable.

6. Disconnect the oscilloscope and connect an rms voltmeter in its place. Do not disconnect the 50 ohm termination. Divide the reading of the rms voltmeter by 10. The result should not exceed the rms limits in the test record form for the appropriate model under “CV Ripple and Noise, rms”.
7. *For models N6781A, N6782A, and N6784A only.* Repeat steps 2 through 6 for the 6 V range.

Transient Recovery Time (all except N678xA SMU and N6783A)

Test category = performance

This test measures the time for the output voltage to recover to within the specified value following a 50% change in the load current.

1. Turn off the DC Power Analyzer and connect an oscilloscope across the sense terminals (see Test Setup A). Connect an electronic load to the output terminals.
2. Turn on the DC Power Analyzer and program the instrument as described in the test record form under “Transient Response”.
3. Set the electronic load to operate in constant current mode. Program its load current to the lower current value indicated in the test record form under “Transient Response”.
4. Set the electronic load's transient generator frequency to 100 Hz and its duty cycle to 50%.
5. Program the load's transient current level to the higher current value indicated in the test record form under “Transient Response”, and turn the transient generator on.
6. Adjust the oscilloscope for a waveform similar to that shown in the following figure.

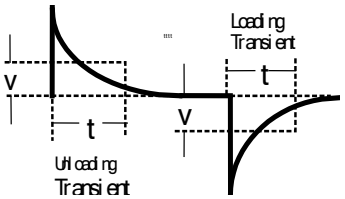

7. The output voltage should return to within the specified voltage at the specified time following the 50% load change. Check both loading and unloading transients by triggering on the positive and negative slope. Record the voltage at time “t” in the performance test record form under “Transient Response”.

Transient Recovery Time (N678xA SMU and N6783A only)

Test category = performance

This test measures the time for the output voltage to recover to within the specified value following the specified change in the load current of the specified range for models N678xA SMU and N6783A.

1. Turn off the DC Power Analyzer and connect an oscilloscope across the sense terminals (see Test Setup A). Connect an N6784A as a load to the output terminals. For models N678xA SMU only, observe the following additional connection requirements:
   a. Twist the load leads, the length cannot exceed 3 ft.
   b. Connect a 150 μF cap and 50 mΩ resistor across the load.
   c. Disconnect the sense jumpers. Keep 4-wire sensing enabled.
   d. Connect a 22 AWG twisted-pair from the +/- sense terminal to the output terminals of the N6784A load.
2. Turn on the DC Power Analyzer and program the instrument as described in the test record form under “Transient Response 6 V”.

3 Set the N6784A that is being used as the load as follows:
a. Emulation Mode = CC Load (in current priority mode)
b. + Voltage limit = 6.12 V
c. Current Slew setting:
N678xA: Maximum (the default)
N6783A: 67500 A/s (for a pulse rise/fall time of 20 µs)
d. Arb = Current Pulse
e. Load pulse properties:
N678xA: I_0= –0.1 A; I_1= –1.5A; T_0= 1ms; T_1= 1ms; T_2= 1ms
N6783A: I_0= –0.15A; I_1= –1.5A; T_0= 0.5ms; T_1= 0.5ms; T_2= 0.5ms
f. Continuous = ON
g. Press Arb run.

4 Adjust the oscilloscope for a waveform similar to that shown in the following figure.

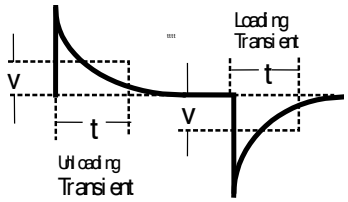

5 The output voltage should return to within the specified voltage at the specified time following the 50% load change. Check both loading and unloading transients by triggering on the positive and negative slope. Record the voltage at time “t” in the performance test record form under “Transient Response”.

6 *For models N6781A, N6782A, and N6784A only.* Repeat steps 3 through 5 for the 20 V range. Program the instrument settings as described on the test record form under “Transient Response 20 V”. Change the settings of the N6784A that is being used as the load as follows:
b. + Voltage limit = 20.4 V
e. Load pulse properties:
N678xA: I_0= –0.1 A; I_1= –0.9A; T_0= 1ms; T_1= 1ms; T_2= 1ms

Auxiliary Voltage Measurement Accuracy (N6781A/N6785A only)

Test category = performance

This test verifies the auxiliary voltage measurement accuracy.

1 Turn off the DC Power Analyzer and connect the external DMM and an external power supply to the auxiliary voltage inputs (see Test Setup E).

2 Turn on the external power supply and set the output to 20 V. Turn on the DC Power Analyzer. Select Meter View, Properties, and then select the Aux Voltage measurement input.

3 Record the external DMM reading and the auxiliary DVM readings. The auxiliary voltage reading should be within the designated voltage limit indicated in the test record form under “Auxiliary Voltage Readback”.

4 Reverse the leads of the external power supply and repeat step 3.

Constant Current Tests

NOTE Test each output channel individually. Refer to the appropriate test record form for the instrument settings of the model you are checking.

Current Programming and Readback Accuracy

Test category = performance, calibration

This test verifies that the current programming and measurement functions are within specifications.

1. Turn off the DC Power Analyzer and connect the current shunt directly across the output terminals. Connect the DMM directly across the current shunt (see Test Setup B). Note that the electronic load is not used in this portion of the test.
2. Turn on the DC Power Analyzer and program the instrument settings as described in the test record form under “Current Programming & Readback, Min Current”. The output status should be “CC”, and the output voltage should be close to zero.
3. Divide the voltage drop (DMM reading) across the current shunt by the shunt resistance to convert to amps and record this value (Iout). Also, record the current measured over the interface. The readings should be within the limits specified in the test record form for the appropriate model under “Current Programming & Readback, Minimum Current”.
4. Program the instrument settings as described in the test record form under “Current Programming & Readback, High Current”.
5. Divide the voltage drop (DMM reading) across the current shunt by the shunt resistance to convert to amps and record this value (Iout). Also, record the current reading measured over the interface. The readings should be within the limits specified in the test record form for the appropriate model under “Current Programming & Readback, High Current”.
6. *For models N6761A and N6762A only.* Connect the Keysight 3458A directly across the output (see Test Setup D without the resistor). Set the Keysight 3458A to the 100 mA range (no autoranging). Set both the current programming and the current measurement functions to the low range. Set the instrument as described under “Current Programming & Readback, Low Current”. Record the current reading of the 3458A. Also, record the current reading measured over the interface. The readings should be within the limits specified under “Current Programming & Readback, Low Range”.
7. *For models N6761A and N6762A with option 2UA only.* Connect the Keysight 3458A and a 20k resistor to the output (see Test Setup D). Set the Keysight 3458A to measure current using the 1 mA range. Set the current measurement to the 200 µA range. Set the instrument as described in the test record form under “Current Readback, 200 µA Current”. Record the current reading of the

Keysight 3458A and the current measured over the interface. Readings should be within limits specified for the appropriate model under “Current Readback, 200µA Range”.

8 *For models N6763A–N6766A, and N6783A only.* Set the current measurement to the low range. Set the instrument as described under “Current Readback, Low Current”. Repeat step 5. Record the current measured over the interface. The readings should be within the limits specified under “Low Current Readback Low Range”.

9 *Steps 9 and 10 for models N6781A, N6782A, N6784A only.* Connect the Keysight 3458A directly across the output (see Test Setup D without the resistor). Set the Keysight 3458A to the 100 mA range (no autoranging). Set the current programming to the low ranges - 300 mA for N6781A and N6782A; 100 mA for the N6784A, . Set the instrument as described under “Current Programming 300 mA & 100 mA ranges”. Record the current readings of the 3458A. The readings should be within the limits specified under “300 mA and 100 mA range Current Iout”.

10 Set the current programming to the 10 mA range for the N6784A. Set the instrument as described under “Current Programming 10 mA range”. Record the current reading of the 3458A. The reading should be within the limits specified under “10 mA range Current Iout”.

11 *Steps 11 and 12 for models N6781A, N6782A, N6784A, N6785A, and N6786A only.* Connect the Keysight 3458A in series with a 10 Ω resistor to the output (see Test Setup D). Set the Keysight 3458A to measure current using the 100 mA range. Set the current measurement to the 100 mA range. Set the instrument as described under “Current Readback 100 mA Range”. Record the current reading of the 3458A and the current measured over the interface. The readings should be within the limits specified under “100 mA Range Readback”.

12 Connect the Keysight 3458A in series with a 10 kΩ resistor to the output (see Test Setup D). Set the Keysight 3458A to measure current using the 10 mA range. Set the current measurement to the 1 mA range. Set the instrument as described under “Current Readback 1 mA Range”. Record the current reading of the 3458A and the current measured over the interface. The readings should be within the limits specified under “1 mA Range Readback”.

13 *For models N6781A, N6782A, and N6784A only.* Connect the Keysight 3458A in series with a 1 MΩ resistor to the output (see Test Setup D). Set the Keysight 3458A to measure current using the 100 µA range. The remote command is “DCI 100e-6”. Set the current measurement to the 10 µA range. Set the instrument as described under “Current Readback, 10 µA Range”. Record the current reading of the 3458A and the current measured over the interface. The readings should be within the limits specified under “10 µA Range Readback”.

CC Load Effect

Test category = performance

This test measures the change in output current resulting from a change in output voltage from full scale to short circuit.

1. Turn off the DC Power Analyzer and connect the current shunt, DMM, and electronic load (see Test Setup B). Connect the DMM directly across the current shunt.
2. Turn on the DC Power Analyzer and program the instrument settings as described in the test record under “CC Load Effect”.
3. Set the electronic load for CV mode and program it to the output channel’s voltage as described in the test record under “CC Load Effect”. The output status should be “CC”. If it isn’t, adjust the load so that the output voltage drops slightly.
4. Divide the voltage drop (DMM reading) across the current monitoring resistor by its resistance to convert to amps and record this value (Iout).
5. Short the electronic load. For models N6751A and N6752A, wait 10 seconds for the output to stabilize. For models N6761A and N6762A, wait 60 seconds for the output to stabilize. Divide the voltage drop (DMM reading) across the current monitoring resistor by its resistance to convert to amps and record this value (Iout). The difference in the current readings in steps 4 and 5 is the load effect, which should not exceed the value listed in the test record for the appropriate model under “CC Load Effect”.
6. *For models N6781A and N6782A only.* Repeat steps 2 through 5 for the 1 A range and the 300 mA range.
7. *For model N6784A only.* Repeat steps 2 through 5 for the 1 A range, the 100 mA range, and the 10 mA range.

CC Source Effect

Test category = performance

This test measures the change in output current that results from a change in AC line voltage from the minimum to maximum value within the line voltage specifications.

1. Turn off the DC Power Analyzer and connect the ac power line through a variable voltage transformer or AC source.
2. Connect the current shunt, DMM, and electronic load (see Test Setup B). Connect the DMM directly across the current shunt. Set the transformer or AC source to nominal line voltage.
3. Turn on the DC Power Analyzer and program the instrument settings as described in the test record under “CC Source Effect”.
4. Set the electronic load for the output channel’s voltage under “CC Source Effect”. The output status should be “CC”. If it isn’t, adjust the load so that the output voltage drops slightly.

5 Adjust the AC input to the lowest rated line voltage (86 VAC).

6 Divide the voltage drop (DMM reading) across the current monitoring resistor by its resistance to convert to amps and record this value (Iout).

7 Adjust the AC input to the highest rated line voltage (264 VAC).

8 Divide the voltage drop (DMM reading) across the current monitoring resistor by its resistance to convert to amps and record this value (Iout). The difference between the DMM reading in steps 6 and 8 is the source effect, which should not exceed the value listed in the test record for the appropriate model under “CC Source Effect”.

Resistance Programming Accuracy (N6781A and N6785A only)

Test category = performance, calibration

Note: Current readback accuracy must be verified prior to this test.

1 Connect an external DMM and an electronic load directly to the output (see Test Setup F). Turn on the DC Power Analyzer.

2 Set the 20 V range and program the output to 10 V. Turn the output on and record the voltage reading on the DMM. This is the voltage with no load (Vnl).

3 Program the output resistance to 1 ohm. Turn on the electronic load. Select CC mode, current: 1 A, Input On.

4 Record the voltage reading on the DMM. This is the voltage with a load (Vwl). Record the current reading on the front panel of the DC Power Analyzer. This is the current with a load (Iwl).

5 Calculate the resistance value as follows: R = (Vnl–Vwl)/Iwl
This is the output resistance, which should not exceed value listed in the test record under “Resistance Programming”.

6 For N6781A, repeat steps 2 through 5 for the 6 V range. Set the output voltage to 6 V and the load current to 3 A.

Negative Current Output (N6783A-BAT and -MFG only)

Test category = performance, calibration

1 Connect the DMM, current shunt, and a power supply to the output (see Test Setup G). Connect plus to plus, minus to minus. Set the external power supply to 3V, 3A.

2 Set the N6783A power module to the values indicted in the test record under “Negative Current Output”. The display should read approximately -2 A.

3 Divide the voltage drop (DMM reading) across the current shunt by its resistance to convert to amperes and record this value. The reading should be within the limits specified on the test record under Constant Current Tests, “Negative Current Output”.

Test Record Forms

Test Record Form – Keysight N6731B and N6741B

Keysight N6731B and N6741B	Report No _____		Date _____	
Description	Model	Minimum Specs.	Results	Maximum Specs.
	Constant Voltage Tests			
Voltage Programming & Readback				
Minimum Voltage Vout	Both	– 4 mV	_____	+ 34 mV
Voltage measured over interface	Both	Vout – 20 mV	_____	Vout + 20 mV
High Voltage Vout	Both	4.976 V	_____	5.024 V
Voltage measured over interface	Both	Vout – 25 mV	_____	Vout + 25 mV
CV Load Effect				
	Both	– 5 mV	_____	+ 5 mV
CV Source Effect				
	Both	– 1 mV	_____	+ 1 mV
CV Ripple and Noise				
peak-to-peak	N6731B	N/A	_____	+ 10 mV
	N6741B	N/A	_____	+ 20 mV
rms	Both	N/A	_____	+ 2 mV
Transient Response				
Voltage at 200 μs	N6731B	– 80 mV	_____	+ 80 mV
	N6741B	– 100 mV	_____	+ 100 mV
Voltage at 200 μs w/Option 760/761	N6731B	– 100 mV	_____	+ 100 mV
	N6741B	– 125 mV	_____	+ 125 mV
	Constant Current Tests			
Current Programming & Readback				
Minimum Current Iout	Both	+ 40 mA	_____	+ 80 mA
Current measured over interface	Both	Iout – 20 mA	_____	Iout + 20 mA
High Current Iout	N6731B	9.965 A	_____	10.035 A
	N6741B	19.95 A	_____	20.05 A
Current measured over interface	N6731B	Iout – 35 mA	_____	Iout + 35 mA
	N6741B	Iout – 50 mA	_____	Iout + 50 mA
CC Load Effect				
	Both	– 2 mA	_____	+ 2 mA
CC Source Effect				
	Both	– 1 mA	_____	+ 1 mA

Test Description	N6731B Setting	N6741B Setting
Voltage Programming & Readback, Min Voltage	15 mV, 10 A	15 mV, 20 A
Voltage Programming & Readback, High Voltage	5 V, 10 A	5 V, 20 A
CV Load Effect, Source Effect, Ripple and Noise	5 V, 10 A	5 V, 20 A
Transient Response	5 V, from 5 A to 10 A	5 V, from 10 A to 20 A
Current Programming & Readback, Min Current	60 mA, 5 V	60 mA, 5 V
Current Programming & Readback, High Current	10 A, 5 V	20 A, 5 V
CC Load Effect, Source Effect	10 A, 5 V	20 A, 5 V

Test Record Form – Keysight N6732B and N6742B

Keysight N6732B and N6742B	Report No _____		Date _____	
Description	Model	Minimum Specs.	Results	Maximum Specs.
	Constant Voltage Tests			
Voltage Programming & Readback				
Minimum Voltage Vout	Both	– 4 mV	_____	+ 34 mV
Voltage measured over interface	Both	Vout – 20 mV	_____	Vout + 20 mV
High Voltage Vout	Both	7.973 V	_____	8.027 V
Voltage measured over interface	Both	Vout – 28 mV	_____	Vout + 28 mV
CV Load Effect				
	Both	– 6 mV	_____	+ 6 mV
CV Source Effect				
	Both	– 2 mV	_____	+ 2 mV
CV Ripple and Noise				
peak-to-peak	Both	N/A	_____	+ 12 mV
rms	Both	N/A	_____	+ 2 mV
Transient Response				
Voltage at 200 μs	N6732B	– 80 mV	_____	+ 80 mV
	N6742B	– 100 mV	_____	+ 100 mV
Voltage at 200 μs w/Option 760/761	N6732B	– 100 mV	_____	+ 100 mV
	N6742B	– 125 mV	_____	+ 125 mV
	Constant Current Tests			
Current Programming & Readback				
Minimum Current Iout	Both	+ 20 mA	_____	+ 60 mA
Current measured over interface	Both	Iout – 10 mA	_____	Iout + 10 mA
High Current Iout	N6732B	6.2206 A	_____	6.2794 A
	N6742B	12.46 A	_____	12.54 A
Current measured over interface	N6732B	Iout – 19.37 mA	_____	Iout + 19.37 mA
	N6742B	Iout – 29 mA	_____	Iout + 29 mA
CC Load Effect				
	Both	– 2 mA	_____	+ 2 mA
CC Source Effect				
	Both	– 1 mA	_____	+ 1 mA

	Instrument Settings	
Test Description	N6732B	N6742B
Voltage Programming & Readback, Min Voltage	15 mV, 6.25 A	15 mV, 12.5 A
Voltage Programming & Readback, High Voltage	8 V, 6.25 A	8 V, 12.5 A
CV Load Effect, Source Effect, Ripple and Noise	8 V, 6.25 A	8 V, 12.5 A
Transient Response	8 V, from 3.125 A to 6.25 A	8V, from 6.25A to 12.5A
Current Programming & Readback, Min Current	40 mA, 8 V	40 mA, 8 V
Current Programming & Readback, High Current	6.25 A, 8 V	12.5 A, 8 V
CC Load Effect, Source Effect	6.25 A, 8 V	12.5 A, 8 V

Test Record Form – Keysight N6733B and N6743B

Keysight N6733B and N6743B	Report No _____		Date _____	
Description	Model	Minimum Specs.	Results	Maximum Specs.
	Constant Voltage Tests			
Voltage Programming & Readback				
Minimum Voltage Vout	Both	+ 10 mV	_____	+ 50 mV
Voltage measured over interface	Both	Vout – 20 mV	_____	Vout + 20 mV
High Voltage Vout	Both	19.96 V	_____	20.04 V
Voltage measured over interface	Both	Vout – 40 mV	_____	Vout + 40 mV
CV Load Effect				
	Both	– 9 mV	_____	+ 9 mV
CV Source Effect				
	Both	– 2 mV	_____	+ 2 mV
CV Ripple and Noise				
peak-to-peak	Both	N/A	_____	+ 14 mV
rms	Both	N/A	_____	+ 3 mV
Transient Response				
Voltage at 200 μs	N6733B	– 200 mV	_____	+ 200 mV
	N6743B	– 300 mV	_____	+ 300 mV
	Constant Current Tests			
Current Programming & Readback				
Minimum Current Iout	Both	– 10 mA	_____	+ 30 mA
Current measured over interface	Both	Iout – 5 mA	_____	Iout + 5 mA
High Current Iout	N6733B	2.4762 A	_____	2.5237 A
	N6743B	4.9725 A	_____	5.0275 A
Current measured over interface	N6733B	Iout – 8.75 mA	_____	Iout + 8.75 mA
	N6743B	Iout – 12.5 mA	_____	Iout + 12.5 mA
CC Load Effect				
	Both	– 2 mA	_____	+ 2 mA
CC Source Effect				
	Both	– 1 mA	_____	+ 1 mA

	Instrument Settings	
Test Description	N6733B	N6743B
Voltage Programming & Readback, Min Voltage	30 mV, 2.5 A	30 mV, 5 A
Voltage Programming & Readback, High Voltage	20 V, 2.5 A	20 V, 5 A
CV Load Effect, Source Effect, Ripple and Noise	20 V, 2.5 A	20 V, 5 A
Transient Response	20 V, from 1.25 A to 2.5 A	20 V, from 2.5 A to 5 A
Current Programming & Readback, Min Current	10 mA, 20 V	10 mA, 20 V
Current Programming & Readback, High Current	2.5 A, 20 V	5 A, 20 V
CC Load Effect, Source Effect	2.5 A, 20 V	5 A, 20 V

Test Record Form – Keysight N6734B and N6744B

Keysight N6734B and N6744B	Report No _____		Date _____	
Description	Model	Minimum Specs.	Results	Maximum Specs.
	Constant Voltage Tests			
Voltage Programming & Readback				
Minimum Voltage Vout	Both	+ 5 mV	_____	+ 75 mV
Voltage measured over interface	Both	Vout – 35 mV	_____	Vout + 35 mV
High Voltage Vout	Both	34.93 V	_____	35.07 V
Voltage measured over interface	Both	Vout – 70 mV	_____	Vout + 70 mV
CV Load Effect				
	Both	– 11 mV	_____	+ 11 mV
CV Source Effect				
	Both	– 4 mV	_____	+ 4 mV
CV Ripple and Noise				
peak-to-peak	Both	N/A	_____	+ 15 mV
rms	Both	N/A	_____	+ 5 mV
Transient Response				
Voltage at 200 μs	N6734B	– 200 mV	_____	+ 200 mV
	N6744B	– 300 mV	_____	+ 300 mV
	Constant Current Tests			
Current Programming & Readback				
Minimum Current Iout	Both	– 15 mA	_____	+ 25 mA
Current measured over interface	Both	Iout – 4 mA	_____	Iout + 4 mA
High Current Iout	N6734B	1.47775 A	_____	1.52225 A
	N6744B	2.9755 A	_____	3.0245 A
Current measured over interface	N6734B	Iout – 6.25 mA	_____	Iout + 6.25 mA
	N6744B	Iout – 8.5 mA	_____	Iout + 8.5 mA
CC Load Effect				
	Both	– 2 mA	_____	+ 2 mA
CC Source Effect				
	Both	– 1 mA	_____	+ 1 mA

	Instrument Settings	
Test Description	N6734B	N6744B
Voltage Programming & Readback, Min Voltage	40 mV, 1.5 A	40 mV, 3 A
Voltage Programming & Readback, High Voltage	35 V, 1.5 A	35 V, 3 A
CV Load Effect, Source Effect, Ripple and Noise	35 V, 1.5 A	35 V, 3 A
Transient Response	35 V, from 0.75 A to 1.5 A	35 V, from 1.5 A to 3 A
Current Programming & Readback, Min Current	5 mA, 35 V	5 mA, 35 V
Current Programming & Readback, High Current	1.5 A, 35 V	3 A, 35 V
CC Load Effect, Source Effect	1.5 A, 35 V	3 A, 35 V

Test Record Form – Keysight N6735B and N6745B

Keysight N6735B and N6745B	Report No _____		Date _____	
Description	Model	Minimum Specs.	Results	Maximum Specs.
	Constant Voltage Tests			
Voltage Programming & Readback				
Minimum Voltage Vout	Both	+ 10 mV	_____	+ 130 mV
Voltage measured over interface	Both	Vout – 60 mV	_____	Vout + 60 mV
High Voltage Vout	Both	59.88 V	_____	60.12 V
Voltage measured over interface	Both	Vout – 120 mV	_____	Vout + 120 mV
CV Load Effect				
	N6735B	– 13 mV	_____	+ 13 mV
	N6745B	– 16 mV	_____	+ 16 mV
CV Source Effect				
	Both	– 6 mV	_____	+ 6 mV
CV Ripple and Noise				
peak-to-peak	Both	N/A	_____	+ 25 mV
rms	Both	N/A	_____	+ 9 mV
Transient Response				
Voltage at 200 μs	N6735B	– 400 mV	_____	+ 400 mV
	N6745B	– 500 mV	_____	+ 500 mV
	Constant Current Tests			
Current Programming & Readback				
Minimum Current Iout	Both	– 17.5 mA	_____	+ 22.5 mA
Current measured over interface	Both	Iout – 4 mA	_____	Iout + 4 mA
High Current Iout	N6735B	0.7788 A	_____	0.8212 A
	N6745B	1.5776 A	_____	1.6224 A
Current measured over interface	N6735B	Iout – 5.2 mA	_____	Iout + 5.2 mA
	N6745B	Iout – 6.4 mA	_____	Iout + 6.4 mA
CC Load Effect				
	Both	– 2 mA	_____	+ 2 mA
CC Source Effect				
	Both	– 1 mA	_____	+ 1 mA

	Instrument Settings	
Test Description	N6735B	N6745B
Voltage Programming & Readback, Min Voltage	70 mV, 0.8 A	70 mV, 1.6 A
Voltage Programming & Readback, High Voltage	60 V, 0.8 A	60 V, 1.6 A
CV Load Effect, Source Effect, Ripple and Noise	60 V, 0.8 A	60 V, 1.6 A
Transient Response	60 V, from 0.4 A to 0.8 A	60 V, from 0.8 A to 1.6 A
Current Programming & Readback, Min Current	2.5 mA, 60 V	2.5 mA, 60 V
Current Programming & Readback, High Current	0.8 A, 60 V	1.6 A, 60 V
CC Load Effect, Source Effect	0.8 A, 60 V	1.6 A, 60 V

Test Record Form – Keysight N6736B and N6746B

Keysight N6736B and N6746B	Report No _____		Date _____	
Description	Model	Minimum Specs.	Results	Maximum Specs.
	Constant Voltage Tests			
Voltage Programming & Readback				
Minimum Voltage Vout	Both	0 mV	_____	+ 200 mV
Voltage measured over interface	Both	Vout – 100 mV	_____	Vout + 100 mV
High Voltage Vout	Both	99.8 V	_____	100.2 V
Voltage measured over interface	Both	Vout – 200 mV	_____	Vout + 200 mV
CV Load Effect				
	N6736B	– 20 mV	_____	+ 20 mV
	N6746B	– 30 mV	_____	+ 30 mV
CV Source Effect				
	Both	– 10 mV	_____	+ 10 mV
CV Ripple and Noise				
peak-to-peak	Both	N/A	_____	+ 30 mV
rms	Both	N/A	_____	+ 18 mV
Transient Response				
Voltage at 200 μs	N6736B	– 500 mV	_____	+ 500 mV
	N6746B	– 1000 mV	_____	+ 1000 mV
	Constant Current Tests			
Current Programming & Readback				
Minimum Current Iout	Both	– 8.5 mA	_____	+ 11.5 mA
Current measured over interface	Both	Iout – 2 mA	_____	Iout + 2 mA
High Current Iout	N6736B	0.4893 A	_____	0.5107 A
	N6746B	0.9885 A	_____	1.0115 A
Current measured over interface	N6736B	Iout – 2.75 mA	_____	Iout + 2.75 mA
	N6746B	Iout – 3.5 mA	_____	Iout + 3.5 mA
CC Load Effect				
	Both	– 2 mA	_____	+ 2 mA
CC Source Effect				
	Both	– 1 mA	_____	+ 1 mA

	Instrument Settings	
Test Description	N6736B	N6746B
Voltage Programming & Readback, Min Voltage	100 mV, 0.5 A	100 mV, 1 A
Voltage Programming & Readback, High Voltage	100 V, 0.5 A	100 V, 1 A
CV Load Effect, Source Effect, Ripple and Noise	100 V, 0.5 A	100 V, 1 A
Transient Response	100 V, from 0.25 A to 0.5 A	100 V, from 0.5 A to 1 A
Current Programming & Readback, Min Current	1.5 mA, 100 V	1.5 mA, 100 V
Current Programming & Readback, High Current	0.5 A, 100 V	1 A, 100 V
CC Load Effect, Source Effect	0.5 A, 100 V	1 A, 100 V

Test Record Form – Keysight N6751A and N6752A

Keysight N6751A and N6752A	Report No _____		Date _____	
Description	Model	Minimum Specs.	Results	Maximum Specs.
	Constant Voltage Tests			
Voltage Programming & Readback				
Minimum Voltage Vout	Both	+ 1 mV	_____	+ 39 mV
Voltage measured over interface	Both	Vout – 20 mV	_____	Vout + 20 mV
High Voltage Vout	Both	49.951 V	_____	50.049 V
Voltage measured over interface	Both	Vout – 45 mV	_____	Vout + 45 mV
CV Load Effect				
	Both	– 2 mV	_____	+ 2 mV
CV Source Effect				
	Both	– 1 mV	_____	+ 1 mV
CV Ripple and Noise				
peak-to-peak	Both	N/A	_____	+ 4.5 mV
rms	Both	N/A	_____	+ 0.35 mV
Transient Response				
Voltage at 100 μs	Both	– 75 mV	_____	+ 75 mV
Voltage at 100 μs with Option 761	N6752A	– 125 mV	_____	+ 125 mV
	Constant Current Tests			
Current Programming & Readback				
Minimum Current Iout	Both	– 10 mA	_____	+ 30 mA
Current measured over interface	Both	Iout – 4 mA	_____	Iout + 4 mA
High Current Iout	N6751A	4.975 A	_____	5.025 A
	N6752A	9.970 A	_____	10.030 A
Current measured over interface	N6751A	Iout – 9 mA	_____	Iout + 9 mA
	N6752A	Iout – 14 mA	_____	Iout + 14 mA
CC Load Effect				
	Both	– 2 mA	_____	+ 2 mA
CC Source Effect				
	Both	– 1 mA	_____	+ 1 mA

	Instrument Settings	
Test Description	N6751A	N6752A
Voltage Programming & Readback, Min Voltage	20 mV, 1 A	20 mV, 2 A
Voltage Programming & Readback, High Voltage	50 V, 1 A	50 V, 2 A
CV Load Effect, Source Effect, Ripple and Noise	50 V, 1 A	50 V, 2 A
Transient Response	10 V, from 3 A to 5 A	8.5 V, from 5 A to 10 A
Current Programming & Readback, Min Current	10 mA, 10 V	10 mA, 8.5 V
Current Programming & Readback, High Current	5 A, 10 V	10 A, 8.5 V
CC Load Effect, Source Effect	5 A, 10 V	10 A, 8.5 V

Test Record Form – Keysight N6753A and N6755A

Keysight N6753A and N6755A	Report No _____		Date _____	
Description	Model	Minimum Specs.	Results	Maximum Specs.
	Constant Voltage Tests			
Voltage Programming & Readback				
Minimum Voltage Vout	Both	0 mV	_____	+ 20 mV
Voltage measured over interface	Both	Vout – 10 mV	_____	Vout + 10 mV
High Voltage Vout	Both	19.978 V	_____	20.022 V
Voltage measured over interface	Both	Vout –20 mV	_____	Vout + 20 mV
CV Load Effect				
	Both	– 2 mV	_____	+ 2 mV
CV Source Effect				
	Both	– 0.5 mV	_____	+ 0.5 mV
CV Ripple and Noise				
peak-to-peak	Both	N/A	_____	+ 5 mV
rms	Both	N/A	_____	+ 1 mV
Transient Response				
Voltage at 100 μs	Both	– 30 mV	_____	+ 30 mV
Voltage at 100 μs w/Option 760/761	Both	– 200 mV	_____	+ 200 mV
	Constant Current Tests			
Current Programming & Readback				
Minimum Current Iout	Both	+ 20 mA	_____	+ 80 mA
Current measured over interface	Both	Iout – 30 mA	_____	Iout + 30 mA
High Current Iout	Both	49.920 A	_____	50.080 A
Current measured over interface	Both	Iout – 80 mA	_____	Iout + 80 mA
CC Load Effect				
	Both	– 12 mA	_____	+ 12 mA
CC Source Effect				
	Both	– 5 mA	_____	+ 5 mA

	Instrument Settings	
Test Description	N6753A	N6755A
Voltage Programming & Readback, Min Voltage	10 mV, 15 A	10 mV, 25 A
Voltage Programming & Readback, High Voltage	20 V, 15 A	20 V, 25 A
CV Load Effect, Source Effect, Ripple and Noise	20 V, 15 A	20 V, 25 A
Transient Response	6 V, from 25 A to 50 A	10 V, from 25 A to 50 A
Current Programming & Readback, Min Current	50 mA, 6 V	50 mA, 10 V
Current Programming & Readback, High Current	50 A, 6 V	50 A, 10 V
CC Load Effect, Source Effect	50 A, 6 V	50 A, 10 V

Test Record Form – Keysight N6754A and N6756A

Keysight N6754A and N6756A	Report No _____		Date _____	
Description	Model	Minimum Specs.	Results	Maximum Specs.
	Constant Voltage Tests			
Voltage Programming & Readback				
Minimum Voltage Vout	Both	0 mV	_____	+ 50 mV
Voltage measured over interface	Both	Vout – 25 mV	_____	Vout + 25 mV
High Voltage Vout	Both	59.939 V	_____	60.061 V
Voltage measured over interface	Both	Vout – 55 mV	_____	Vout + 55 mV
CV Load Effect				
	Both	– 2 mV	_____	+ 2 mV
CV Source Effect				
	Both	– 1.2 mV	_____	+ 1.2 mV
CV Ripple and Noise				
peak-to-peak	Both	N/A	_____	+ 6 mV
rms	Both	N/A	_____	+ 1 mV
Transient Response				
Voltage at 100 μs	Both	– 90 mV	_____	+ 90 mV
Voltage at 100 μs w/Option 760/761	Both	– 350 mV	_____	+ 350 mV
	Constant Current Tests			
Current Programming & Readback				
Minimum Current Iout	Both	+ 8 mA	_____	+ 32 mA
Current measured over interface	Both	Iout – 8 mA	_____	Iout + 8 mA
High Current Iout	N6754A	19.968 A	_____	20.032 A
	N6756A	16.071 A	_____	17.029 A
Current measured over interface	N6754A	Iout – 28 mA		Iout + 28 mA
	N6756A	Iout – 25 mA		Iout + 25 mA
CC Load Effect				
	Both	– 5 mA	_____	+ 5 mA
CC Source Effect				
	Both	– 2 mA	_____	+ 2 mA

	Instrument Settings	
Test Description	N6754A	N6756A
Voltage Programming & Readback, Min Voltage	25 mV, 5 A	25 mV, 8.33 A
Voltage Programming & Readback, High Voltage	60 V, 5 A	60 V, 8.33 A
CV Load Effect, Source Effect, Ripple and Noise	60 V, 5 A	60 V, 8.33 A
Transient Response	15 V, from 10 A to 20 A	29 V, from 8.5 A to 17 A
Current Programming & Readback, Min Current	20 mA, 15 V	20 mA, 29 V
Current Programming & Readback, High Current	20 A, 15 V	17 A, 29 V
CC Load Effect, Source Effect	20 A, 15 V	17 A, 29 V

Test Record Form – Keysight N6761A and N6762A

Keysight N6761A and N6762A Description	Report No _____ Model	Minimum Specs.	Date _____ Results	Maximum Specs.
		Constant Voltage Tests		
Voltage Programming & Readback				
Minimum Voltage Vout	Both	+ 9 mV	_____	+ 21 mV
Voltage measured over interface	Both	Vout – 6 mV	_____	Vout + 6 mV
High Voltage Vout	Both	49.986 V	_____	50.014 V
Voltage measured over interface	Both	Vout – 14 mV	_____	Vout + 14 mV
Voltage Prog. & Readback Low Range				
Low Voltage Vout	Both	5.4976 V	_____	5.5024 V
Voltage measured over interface	Both	Vout – 2.4 mV	_____	Vout + 2.4 mV
CV Load Effect				
	Both	– 0.5 mV	_____	+ 0.5 mV
CV Source Effect				
	Both	– 0.5 mV	_____	+ 0.5 mV
CV Ripple and Noise				
peak-to-peak	Both	N/A	_____	+ 4.5 mV
rms	Both	N/A	_____	+ 0.35 mV
Transient Response				
Voltage at 150 µs	Both	– 75 mV	_____	+ 75 mV
		Constant Current Tests		
Current Programming & Readback				
Minimum Current Iout	Both	+ 0.8 mA	_____	+ 1.2 mA
Current measured over interface	Both	Iout – 160 µA	_____	Iout + 160 µA
High Current Iout	N6761A	1.4992 A	_____	1.5008 A
	N6762A	2.9986 A	_____	3.0014 A
Current measured over interface	N6761A	Iout – 0.76 mA	_____	Iout + 0.76 mA
	N6762A	Iout – 1.36 mA	_____	Iout + 1.36 mA
Current Prog. & Readback Low Range				
Low Current (Full Scale) Iout	Both	0.099930 A	_____	0.100070 A
Current measured over interface	Both	Iout – 45 µA	_____	Iout + 45 µA
Current Readback 200 µA Range				
100µA current measured over interface	Both	Iout – 0.6 µA	_____	Iout + 0.6 µA
200µA current measured over interface	Both	Iout – 1.1 µA	_____	Iout + 1.1 µA
CC Load Effect				
	Both	– 65 µA	_____	+ 65 µA
CC Source Effect				
	Both	– 30 µA	_____	+ 30 µA

Test Description	N6761A Settings	N6762A Settings
Voltage Programming & Readback, Min Voltage	15 mV, 1 A	15 mV, 2 A
Voltage Programming & Readback, High Voltage	50 V, 1 A	50 V, 2 A
Voltage Programming & Readback, Low Voltage	5.5 V, 1 A	5.5 V, 2 A
CV Load Effect, Source Effect, Ripple and Noise	50 V, 1 A	50 V, 2 A
Transient Response	33 V, from 0.9 A to 1.5 A	33 V, from 1.5 A to 3 A
Current Programming & Readback, Min Current	1 mA, 33 V	1 mA, 33 V
Current Programming & Readback, High Current	1.5 A, 33 V	3 A, 33 V
Current Programming & Readback, Low Current	100 mA, 33 V	100 mA, 33 V
Current Readback, 100 µA Current	1 mA, 1.9 V	1 mA, 1.9 V
Current Readback, 200 µA Current	1 mA, 3.9 V	1 mA, 3.9 V
CC Load Effect, Source Effect	1.5 A, 33 V	3 A, 33 V

Test Record Form – Keysight N6763A and N6765A

Keysight N6763A and N6765A Description	Report No _____ Model	Minimum Specs.	Date _____ Results	Maximum Specs.
	Constant Voltage Tests			
Voltage Programming & Readback				
Minimum Voltage Vout	Both	+ 5 mV	_____	+ 15 mV
Voltage measured over interface	Both	Vout – 10 mV	_____	Vout + 10 mV
High Voltage Vout	Both	19.989 V	_____	20.011 V
Voltage measured over interface	Both	Vout – 16 mV	_____	Vout + 16 mV
Voltage Readback Low Range				
Voltage measured over interface	Both	Vout – 2.1 mV	_____	Vout + 2.1 mV
CV Load Effect				
	Both	– 2 mV	_____	+ 2 mV
CV Source Effect				
	Both	– 0.5 mV	_____	+ 0.5 mV
CV Ripple and Noise				
peak-to-peak	Both	N/A	_____	+ 5 mV
rms	Both	N/A	_____	+ 1 mV
Transient Response				
Voltage at 100 μs	Both	– 30 mV	_____	+ 30 mV
Voltage at 100 μs w/Option 760/761	Both	– 200 mV	_____	+ 200 mV
	Constant Current Tests			
Current Programming & Readback				
Minimum Current Iout	Both	+ 35 mA	_____	+ 65 mA
Current measured over interface	Both	Iout – 60 mA	_____	Iout + 60 mA
High Current Iout	Both	49.935 A	_____	50.065 A
Current measured over interface	Both	Iout – 60 mA	_____	Iout + 60 mA
Current Readback Low Range				
Current measured over interface	Both	Iout – 1.85 mA	_____	Iout + 1.85 mA
CC Load Effect				
	Both	– 12 mA	_____	+ 12 mA
CC Source Effect				
	Both	– 5 mA	_____	+ 5 mA

Test Description	Instrument Settings N6763A	N6765A
Voltage Programming & Readback, Min Voltage	10 mV, 15 A	10 mV, 25 A
Voltage Programming & Readback, High Voltage	20 V, 15 A	20 V, 25 A
Voltage Readback, Low Voltage	2 V, 15 A	2 V, 25 A
CV Load Effect, Source Effect, Ripple and Noise	20 V, 15 A	20 V, 25 A
Transient Response	6 V, from 25 A to 50 A	10 V, from 25 A to 50 A
Current Programming & Readback, Min Current	50 mA, 6 V	50 mA, 10 V
Current Programming & Readback, High Current	50 A, 6 V	50 A, 10 V
Current Readback, Low Current	1.5 A, 6 V	1.5 A, 10 V
CC Load Effect, Source Effect	50 A, 6 V	50 A, 10 V

Test Record Form – Keysight N6764A and N6766A

Keysight N6764A and N6766A Description	Report No _____ Model	Minimum Specs.	Date _____ Results	Maximum Specs.
	Constant Voltage Tests			
Voltage Programming & Readback				
Minimum Voltage Vout	Both	+ 13 mV	_____	+ 37 mV
Voltage measured over interface	Both	Vout – 25 mV	_____	Vout + 25 mV
High Voltage Vout	Both	59.970 V	_____	60.030 V
Voltage measured over interface	Both	Vout – 43 mV	_____	Vout + 43 mV
Voltage Readback Low Range				
Voltage measured over interface	Both	Vout – 6.8 mV	_____	Vout + 6.8 mV
CV Load Effect				
	Both	– 2 mV	_____	+ 2 mV
CV Source Effect				
	Both	– 1.2 mV	_____	+ 1.2 mV
CV Ripple and Noise				
peak-to-peak	Both	N/A	_____	+ 6 mV
rms	Both	N/A	_____	+ 1 mV
Transient Response				
Voltage at 100 μs	Both	– 90 mV	_____	+ 90 mV
Voltage at 100 μs w/Option 760/761	Both	– 350 mV	_____	+ 350 mV
	Constant Current Tests			
Current Programming & Readback				
Minimum Current Iout	Both	+ 16 mA	_____	+ 24 mA
Current measured over interface	Both	Iout – 5 mA	_____	Iout + 5 mA
High Current Iout	N6764A	19.981 A	_____	20.019 A
	N6766A	16.9833 A	_____	17.0167 A
Current measured over interface	N6764A	Iout – 25 mA	_____	Iout + 25 mA
	N6766A	Iout – 22 mA	_____	Iout + 22 mA
Current Readback Low Range				
Current measured over interface	Both	Iout – 1 mA	_____	Iout + 1 mA
CC Load Effect				
	Both	– 5 mA	_____	+ 5 mA
CC Source Effect				
	Both	– 2 mA	_____	+ 2 mA

	Instrument Settings	
Test Description	N6764A	N6766A
Voltage Programming & Readback, Min Voltage	25 mV, 5 A	25 mV, 8.33 A
Voltage Programming & Readback, High Voltage	60 V, 5 A	60 V, 8.33 A
Voltage Readback, Low Voltage	6 V, 5 A	6 V, 8.33 A
CV Load Effect, Source Effect, Ripple and Noise	60 V, 5 A	60 V, 8.33 A
Transient Response	15 V, from 10 A to 20 A	29 V, from 8.5 A to 17 A
Current Programming & Readback, Min Current	20 mA, 15 V	20 mA, 29 V
Current Programming & Readback, High Current	20 A, 15 V	17 A, 29 V
Current Readback, Low Current	0.5 A, 15 V	0.5 A, 29 V
CC Load Effect, Source Effect	20 A, 15 V	17 A, 29 V

Test Record Form – Keysight N6773A

Keysight Model N6773A	Report No _____		Date _____	
Description	Model	Minimum Specs.	Results	Maximum Specs.
		Constant Voltage Tests		
Voltage Programming & Readback				
Minimum Voltage Vout		+ 10 mV	_____	+ 50 mV
Voltage measured over interface		Vout – 20 mV	_____	Vout + 20 mV
High Voltage Vout		19.96 V	_____	20.04 V
Voltage measured over interface		Vout – 40 mV	_____	Vout + 40 mV
CV Load Effect				
		– 13 mV	_____	+ 13 mV
CV Source Effect				
		– 2 mV	_____	+ 2 mV
CV Ripple and Noise				
peak-to-peak		N/A	_____	+ 20 mV
rms		N/A	_____	+ 3 mV
Transient Response				
Voltage at 250 μs		– 300 mV	_____	+ 300 mV
Voltage at 250 μs w/Option 760/761		– 350 mV	_____	+ 350 mV
		Constant Current Tests		
Current Programming & Readback				
Minimum Current Iout		– 30 mA	_____	+ 90 mA
Current measured over interface		Iout – 15 mA	_____	Iout + 15 mA
High Current Iout		14.9175 A	_____	15.0825 A
Current measured over interface		Iout – 37.5 mA	_____	Iout + 37.5 mA
CC Load Effect				
		– 6 mA	_____	+ 6 mA
CC Source Effect				
		– 1 mA	_____	+ 1 mA

Test Description	N6773A Setting
Voltage Programming & Readback, Min	30 mV, 15 A
Voltage Programming & Readback, High	20 V, 15 A
CV Load Effect, Source Effect, Ripple and Noise	20 V, 15 A
Transient Response	20 V, from 7.5 A to 15 A
Current Programming & Readback, Min	30 mA, 20 V
Current Programming & Readback, High	15 A, 20 V
CC Load Effect, Source Effect	15 A, 20 V

Test Record Form – Keysight N6774A

Keysight Model N6774A	Report No _____		Date _____	
Description	Model	Minimum Specs.	Results	Maximum Specs.
		Constant Voltage Tests		
Voltage Programming & Readback				
Minimum Voltage Vout		+ 5 mV	_____	+ 75 mV
Voltage measured over interface		Vout – 35 mV	_____	Vout + 35 mV
High Voltage Vout		34.93 V	_____	35.07 V
Voltage measured over interface		Vout – 70 mV	_____	Vout + 70 mV
CV Load Effect				
		– 16 mV	_____	+ 16 mV
CV Source Effect				
		– 4 mV	_____	+ 4 mV
CV Ripple and Noise				
peak-to-peak		N/A	_____	+ 22 mV
rms		N/A	_____	+ 5 mV
Transient Response				
Voltage at 250 μs		– 300 mV	_____	+ 300 mV
Voltage at 250 μs w/Option 760/761		– 350 mV	_____	+ 350 mV
		Constant Current Tests		
Current Programming & Readback				
Minimum Current Iout		– 45 mA	_____	+ 75 mA
Current measured over interface		Iout – 12 mA	_____	Iout + 12 mA
High Current Iout		8.42725 A	_____	8.57275 A
Current measured over interface		Iout – 24.75 mA	_____	Iout + 24.75 mA
CC Load Effect				
		– 6 mA	_____	+ 6 mA
CC Source Effect				
		– 1 mA	_____	+ 1 mA

Test Description	N6774A Setting
Voltage Programming & Readback, Min	40 mV, 8.5 A
Voltage Programming & Readback, High	35 V, 8.5 A
CV Load Effect, Source Effect, Ripple and Noise	35 V, 8.5 A
Transient Response	35 V, from 4.25 A to 8.5 A
Current Programming & Readback, Min	15 mA, 35 V
Current Programming & Readback, High	8.5 A, 35 V
CC Load Effect, Source Effect	8.5 A, 35 V

Test Record Form – Keysight N6775A

Keysight Model N6775A	Report No _____		Date _____	
Description	Model	Minimum Specs.	Results	Maximum Specs.
	Constant Voltage Tests			
Voltage Programming & Readback				
Minimum Voltage Vout		+ 10 mV	_____	+ 130 mV
Voltage measured over interface		Vout – 60 mV	_____	Vout + 60 mV
High Voltage Vout		59.88 V	_____	60.12 V
Voltage measured over interface		Vout – 120 mV	_____	Vout + 120 mV
CV Load Effect				
		– 24 mV	_____	+ 24 mV
CV Source Effect				
		– 6 mV	_____	+ 6 mV
CV Ripple and Noise				
peak-to-peak		N/A	_____	+ 35 mV
rms		N/A	_____	+ 9 mV
Transient Response				
Voltage at 250 μs		– 500 mV	_____	+ 500 mV
	Constant Current Tests			
Current Programming & Readback				
Minimum Current Iout		– 52.5 mA	_____	+ 67.5 mA
Current measured over interface		Iout – 12 mA	_____	Iout + 12 mA
High Current Iout		4.9325 A	_____	5.0675 A
Current measured over interface		Iout – 19.5 mA	_____	Iout + 19.5 mA
CC Load Effect				
		– 6 mA	_____	+ 6 mA
CC Source Effect				
		– 1 mA	_____	+ 1 mA

Test Description	N6775A Setting
Voltage Programming & Readback, Min	70 mV, 5 A
Voltage Programming & Readback, High	60 V, 5 A
CV Load Effect, Source Effect, Ripple and Noise	60 V, 5 A
Transient Response	60 V, from 2.5 A to 5 A
Current Programming & Readback, Min	7.5 mA, 60 V
Current Programming & Readback, High	5 A, 60 V
CC Load Effect, Source Effect	5 A, 60 V

Test Record Form – Keysight N6776A

Keysight Model N6776A	Report No _____		Date _____	
Description	Model	Minimum Specs.	Results	Maximum Specs.
	Constant Voltage Tests			
Voltage Programming & Readback				
Minimum Voltage Vout		0 mV	_____	+ 200 mV
Voltage measured over interface		Vout – 100 mV	_____	Vout + 100 mV
High Voltage Vout		99.8 V	_____	100.2 V
Voltage measured over interface		Vout – 200 mV	_____	Vout + 200 mV
CV Load Effect				
		– 45 mV	_____	+ 45 mV
CV Source Effect				
		– 10 mV	_____	+ 10 mV
CV Ripple and Noise				
peak-to-peak		N/A	_____	+ 45 mV
rms		N/A	_____	+ 18 mV
Transient Response				
Voltage at 250 μs		– 1000 mV	_____	+ 1000 mV
	Constant Current Tests			
Current Programming & Readback				
Minimum Current Iout		– 25.5 mA	_____	+ 34.5 mA
Current measured over interface		Iout – 6 mA	_____	Iout + 6 mA
High Current Iout		2.9655 A	_____	3.0345 A
Current measured over interface		Iout – 10.5 mA	_____	Iout + 10.5 mA
CC Load Effect				
		– 6 mA	_____	+ 6 mA
CC Source Effect				
		– 1 mA	_____	+ 1 mA

Test Description	N6776A Setting
Voltage Programming & Readback, Min	100 mV, 3 A
Voltage Programming & Readback, High	100 V, 3 A
CV Load Effect, Source Effect, Ripple and Noise	100 V, 3 A
Transient Response	100 V, from 1.5 A to 3 A
Current Programming & Readback, Min	4.5 mA, 100 V
Current Programming & Readback, High	3 A, 100 V
CC Load Effect, Source Effect	3 A, 100 V

Test Record Form – Keysight N6777A

Keysight Model N6777A	Report No _____		Date _____	
Description	Model	Minimum Specs.	Results	Maximum Specs.
	Constant Voltage Tests			
Voltage Programming & Readback				
Minimum Voltage Vout		0 mV	_____	+ 300 mV
Voltage measured over interface		Vout – 150 mV	_____	Vout + 150 mV
High Voltage Vout		149.7 V	_____	150.3 V
Voltage measured over interface		Vout – 300 mV	_____	Vout + 300 mV
CV Load Effect				
		– 68 mV	_____	+ 68 mV
CV Source Effect				
		– 15 mV	_____	+ 15 mV
CV Ripple and Noise				
peak-to-peak		N/A	_____	+ 68 mV
rms		N/A	_____	+ 27 mV
Transient Response				
Voltage at 250 μs		– 2.0 V	_____	+ 2.0 V
	Constant Current Tests			
Current Programming & Readback				
Minimum Current Iout		– 27 mA	_____	+ 33 mA
Current measured over interface		Iout – 6 mA	_____	Iout + 6 mA
High Current Iout		1.967 A	_____	2.033 A
Current measured over interface		Iout – 9 mA	_____	Iout + 9 mA
CC Load Effect				
		– 6 mA	_____	+ 6 mA
CC Source Effect				
		– 1 mA	_____	+ 1 mA

Test Description	N6777A Setting
Voltage Programming & Readback, Min	150 mV, 2 A
Voltage Programming & Readback, High	150 V, 2 A
CV Load Effect, Source Effect, Ripple and Noise	150 V, 2 A
Transient Response	150 V, from 1 A to 2 A
Current Programming & Readback, Min	3 mA, 150 V
Current Programming & Readback, High	2 A, 150 V
CC Load Effect, Source Effect	2 A, 150 V

Test Record Form – Keysight N6781A, N6782A, and N6784A SMU

Keysight N6781A, N6782A and N6784A	Report No _____		Date _____	
Description	Model	Minimum Specs.	Results	Maximum Specs.
	Constant Voltage Tests			
Voltage Programming & Readback				
Minimum Voltage Vout	All	– 1.8 mV	_____	+ 1.8 mV
Voltage measured over interface	All	Vout – 1.2 mV	_____	Vout + 1.2 mV
High Voltage Vout	All	19.9932 V	_____	20.0068 V
Voltage measured over interface	All	Vout – 6.2 mV	_____	Vout + 6.2 mV
Voltage Prog. & Readback Low Range	All	0.99915 V	_____	1.00085 V
1 V Voltage Vout	All	Vout – 325 µV	_____	Vout + 325 µV
Voltage measured over interface				
600 mV Prog. & 100 mV Readback				
100 mV Voltage Vout	All	99.775 mV	_____	100.225 mV
Voltage measured over interface	All	Vout – 75 µV	_____	Vout + 75 µV
CV Load Effect				
20 V output range	All	– 700 µV	_____	+ 700 µV
6 V output range	All	– 400 µV	_____	+ 400 µV
CV Ripple and Noise				
peak-to-peak 20 V output range	All	N/A	_____	+ 12 mV
rms 20 V output range	All	N/A	_____	+ 1.2 mV
peak-to-peak 6 V output range	All	N/A	_____	+ 12 mV
rms 6 V output range	All	N/A	_____	+ 1.2 mV
Transient Response				
6 V output range at 35 µs	All	– 20 mV	_____	+ 20 mV
20 V output range at 35 µs	All	– 10 mV	_____	+ 10 mV
Auxiliary Voltage Readback	N6781A	Vout – 10 mV	_____	Vout + 10 mV
	Constant Current Tests			
Current Programming & Readback				
Minimum Current Iout	All	– 300 µA	_____	+ 300 µA
Current measured over interface	All	Iout – 250 µA	_____	Iout + 250 µA
High Current Iout	All	2.9985 A	_____	3.0015 A
Current measured over interface	All	Iout – 1.15 mA	_____	Iout + 1.15 mA
300 mA, 100 mA, 10 mA Programming	N6781/82A	99.82 mA	_____	100.18 mA
300 mA range Current Iout	N6784A	99.958 mA	_____	100.042 mA
100 mA range Current Iout	N6784A	9.9925 mA	_____	10.0075 mA
10 mA range Current Iout				
100 mA, 1 mA, 10 µA Readback				
100 mA range measured over interface	All	Iout – 35 µA	_____	Iout + 35 µA
1 mA range measured over interface	All	Iout – 350 nA	_____	Iout + 350 nA
(when installed in N6705A mainframe)		(Iout – 360 nA)	(_____)	(Iout + 360 nA)
10 µA range measured over interface	All	Iout – 10.5 nA	_____	Iout + 10.5 nA
(when installed in N6705A mainframe)		(Iout – 22.5 nA)	(_____)	(Iout + 22.5 nA)

Keysight N678xA SMU Test Record Card (continued)

Constant Current Tests - continued				
CC Load Effect				
3 A output range	All	– 100 µA	_____	+ 100 µA
1 A output range	All	– 50 µA	_____	+ 50 µA
300 mA output range	N6781/82A	– 50 µA	_____	+ 50 µA
100 mA & 10 mA output ranges	N6784A	– 1 µA	_____	+ 1 µA
N6781A Resistance Tests				
Resistance Programming				
20 V output range	N6781A	0.996 Ω	_____	1.004 Ω
6 V output range	N6781A	0.9975 Ω	_____	1.0025 Ω

Instrument Settings – Keysight N678xA SMU

Test Description	N6781A, N6782A, and N6784A Settings
Voltage Programming & Readback, Min Voltage	Voltage Priority; 0 V, 1 A
Voltage Programming & Readback, High Voltage	Voltage Priority; 20 V, 1 A
Voltage Programming & Readback, Low Voltage	Voltage Priority; 1 V, 1 A
600 mV Programming & 100 mV Readback	Voltage Priority; 0.1 V, 1 A
CV Load Effect, 20 V range	Voltage Priority; 20 V, 1 A
CV Load Effect, 6 V range	Voltage Priority; 6 V, 3 A
CV Load Effect, 600 mV range	Voltage Priority; 100 mV, 3 A
CV Ripple and Noise, 20 V range	Voltage Priority; 20 V, 1 A
CV Ripple and Noise, 6 V range	Voltage Priority; 6 V, 3 A
Transient Response, 6 V range	Voltage Priority; Comp.= HIGH3; 6V, from 0.1 to 1.5 A
Transient Response, 20 V range	Voltage Priority; Comp.= HIGH3; 20V, from 0.1 to 0.9 A
Current Programming & Readback, Min Current	Current Priority; 0 A, 6 V
Current Programming & Readback, High Current	Current Priority; 3 A, 6 V
Current Programming 300 mA & 100 mA ranges	Current Priority; 100 mA, 20 V
Current Programming 10 mA range	Current Priority; 10 mA, 20 V
Current Readback 100 mA range	Voltage Priority; 100 mA, 1 V
Current Readback 1 mA Range	Voltage Priority; 1 mA, 10 V
Current Readback 10 µA Range	Voltage Priority; 10 µA, 10 V
CC Load Effect, 3 A range	Current Priority; 3 A, 6 V
CC Load Effect, 1 A range	Current Priority; 1 A, 6 V
CC Load Effect, 300 mA range	Current Priority; 100 mA, 6 V
CC Load Effect, 100 mA range	Current Priority; 100 mA, 6 V
CC Load Effect, 10 mA range	Current Priority; 10 mA, 6 V
N6781A Resistance Programming, 20 V range	Voltage Priority; 10 V, 1 Ω (Elect. load: CC mode, 20 V, 1A)
N6781A Resistance Programming, 6 V range	Voltage Priority; 6 V, 1 Ω (Elect. load: CC mode, 20 V, 3A)

Test Record Form – Keysight N6785A and N6786A SMU

Keysight N6785A and N6786A	Report No _____		Date _____	
Description	Model	Minimum Specs.	Results	Maximum Specs.
		Constant Voltage Tests		
Voltage Programming & Readback				
Minimum Voltage Vout	Both	– 1.8 mV	_____	+ 1.8 mV
Voltage measured over interface	Both	Vout – 1.8 mV	_____	Vout + 1.8 mV
High Voltage Vout	Both	19.9932 V	_____	20.0068 V
Voltage measured over interface	Both	Vout – 6.8 mV	_____	Vout + 6.8 mV
CV Load Effect	Both	– 700 µV	_____	+ 700 µV
CV Ripple and Noise				
peak-to-peak	Both	N/A	_____	+ 15 mV
rms	Both	N/A	_____	+ 1.5 mV
Transient Response				
6 V output at 35 µs	Both	– 20 mV	_____	+ 20 mV
Auxiliary Voltage Readback	N6785A	Vout – 10 mV	_____	Vout + 10 mV
		Constant Current Tests		
Current Programming & Readback				
Minimum Current Iout	Both	– 1.5 mA	_____	+ 1.5 mA
Current measured over interface	Both	Iout – 1.5 mA	_____	Iout + 1.5 mA
High Current Iout	Both	7.9953 A	_____	8.0047 A
Current measured over interface	Both	Iout – 4.7 mA	_____	Iout + 4.7 mA
100 mA and 1 mA Readback				
100 mA range measured over interface	Both	Iout – 35 µA	_____	Iout + 35 µA
1 mA range measured over interface	Both	Iout – 350 nA	_____	Iout + 350 nA
(when installed in N6705A mainframe)		(Iout – 360 nA)	(_____)	(Iout + 360 nA)
CC Load Effect	Both	– 400 µA	_____	+ 400 µA
		N6785A Resistance Tests		
Resistance Programming	N6785A	0.998 Ω	_____	1.002 Ω

Test Description	N6785A and N6785A Instrument Settings
Voltage Programming & Readback, Min Voltage	Voltage Priority; 0 V, 4 A
Voltage Programming & Readback, High Voltage	Voltage Priority; 20 V, 4 A
CV Load Effect	Voltage Priority; 20 V, 4 A
CV Ripple and Noise	Voltage Priority; 20 V, 4 A
Transient Response	Voltage Priority; Comp.= HIGH3; 6 V, from 0.1 to 1.5 A
Current Programming & Readback, Min Current	Current Priority; 0 A, 6 V
Current Programming & Readback, High Current	Current Priority; 8 A, 6 V
Current Readback 100 mA range	Voltage Priority; 100 mA, 1 V
Current Readback 1 mA Range	Voltage Priority; 1 mA, 10 V
CC Load Effect	Current Priority; 8 A, 6 V
N6785A Resistance Programming	Voltage Priority; 10 V, 1 Ω (Elect. load: CC mode, 20 V, 1A)

Test Record Form – Keysight N6783A-BAT and N6783A-MFG

Keysight N6783A-BAT, N6783A-MFG	Report No _____		Date _____	
Description	Model	Minimum Specs.	Results	Maximum Specs.
	Constant Voltage Tests			
Voltage Programming & Readback				
Minimum Voltage Vout	Both	+5 mV	_____	+25 mV
Voltage measured over interface	Both	Vout – 5 mV	_____	Vout + 5 mV
High Voltage Vout	N6783A-BAT	7.982 V	_____	8.018 V
	N6783A-MFG	5.984 V	_____	6.016 V
Voltage measured over interface	N6783A-BAT	Vout – 9 mV	_____	Vout – 9 mV
	N6783A-MFG	Vout – 8 mV	_____	Vout + 8 mV
CV Load Effect				
	Both	– 6 mV	_____	+ 6 mV
CV Source Effect				
	Both	– 2 mV	_____	+ 2 mV
CV Ripple and Noise				
peak-to-peak	Both	N/A	_____	+ 8 mV
rms		N/A	_____	+ 1.5 mV
Transient Response 6 V				
Voltage at 45 μs	Both	– 75 mV	_____	+ 75 mV
Voltage at 75 μs with Option 761	Both	– 90 mV	_____	+ 90 mV
	Constant Current Tests			
Current Programming & Readback				
Minimum Current Iout	Both	+ 3.2 mA	_____	+ 6.8 mA
Current measured over interface	Both	Iout – 0.6 mA	_____	Iout + 0.6 mA
High Current Iout	Both	2.9952 A	_____	3.0048 A
Current measured over interface	Both	Iout – 3.6 mA	_____	Iout + 3.6 mA
Current Readback Low Range				
Current measured over interface	Both	Iout – 225 μA	_____	Iout + 225 μA
CC Load Effect				
	Both	– 2 mA	_____	+ 2 mA
CC Source Effect				
	Both	– 1 mA	_____	+ 1 mA
Negative Current Output				
	Both	– 1.9942 A	_____	– 2.0058 A

Test Description	N6783A-BAT Setting	N6783A-MFG Setting
Voltage Programming & Readback, Min	15 mV, 3 A	15 mV, 3 A
Voltage Programming & Readback, High	8 V, 3 A	6 V, 3 A
CV Load Effect, Source Effect, Ripple and Noise	8 V, 3 A	6 V, 3 A
Transient Response 6 V	6 V, from 0.15 A to 1.5 A	6 V, from 0.15 A to 1.5 A
Current Programming & Readback, Min	5 mA, 8 V	5 mA, 6 V
Current Programming & Readback, High	3 A, 8 V	3 A, 6 V
Current Readback, Low Current	150 mA, 8 V	150 mA, 6 V
CC Load Effect, Source Effect	3 A, 8 V	3 A, 6 V
Negative Current Output	0 V, –2A	0 V, –2A

3
Calibration

Calibration Description.....44
Calibration Procedure – Models N673xB, N674xB, N677xA 46
Calibration Procedure – Models N675xA 49
Calibration Procedure – Models N676xA 53
Calibration Procedure – Models N678xA SMU 62
Calibration Procedure – Models N6783A-BDA and -MFG 76
Change the Admin/Calibration Password 80

This chapter includes calibration procedures for the Keysight N6705 DC Power Analyzer. Instructions are given for performing the procedures from either the front panel or a controller over the GPIB.

Refer to the “Equipment Required” section in chapter 2 for a list of the equipment required for calibration. Also refer to “Measurement Techniques” for information about connecting the voltmeter and current shunt.

NOTE Perform the verification tests before calibrating your DC Power Analyzer. If the DC Power Analyzer passes the verification tests, the unit is operating within its calibration limits and does not need to be re-calibrated.

Calibration Interval

The recommended calibration interval for Keysight N6700 Series power modules is one year. Keysight N6705 DC Power Analyzer mainframes do not require calibration.

KEYSIGHT TECHNOLOGIES

Calibration Description

Refer to the “Equipment Required” section in chapter 2 for a list of the equipment required for calibration. Also refer to “Measurement Techniques” for information about voltmeter and current shunt connections. Additional information about calibration follows:

- The correct password is required to enter the Administrative Tools menu, which contains the calibration function. The password is factory-set to 0 (zero). You can change the password once calibration mode is entered to prevent unauthorized access to the calibration mode. Refer to “Change the Calibration Password” at the end of this section.
- Calibrate only ONE output channel at a time. When using the SCPI calibration commands, you can only enter a single channel number for the channel parameter.
- When calibrating the unit using SCPI commands, most steps involve sending a *OPC? query to synchronize with the DC Power Analyzer’s command completion before proceeding. The response from the instrument must be read each time *OPC? is given. In some steps, it may take up to 30 seconds for *OPC? to respond.
- **Once started, you must perform the complete calibration procedure in its entirety.** As each calibration section is completed, the instrument calculates new calibration constants and begins using them. However, these constants are not saved in nonvolatile memory until a SAVE command is explicitly given.
- Exit the calibration mode either by logging out of the Administrative Tools menu or by sending CAL:STAT OFF. Note that any output channels that were calibrated but not saved will revert to their previous calibration constants.

Calibration Switches

Two switches control the access to calibration commands. The switches are on the BNC board and are accessible by removing the side cover. Refer to “Accessing the Calibration switch” in chapter 4 for settings information.

Front Panel Connections

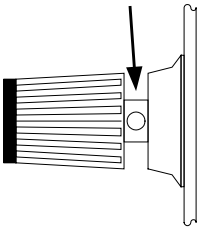

Except for Cal Setup C, do not connect anything to the Sense terminals. Check the front panel 4 wire LED to see whether 4 wire sensing is enabled (LED is lit) or disabled (LED not lit). To change the 4 wire sense settings, press [Settings], then navigate to and select **Advanced**. Under Sense, select Local or 4 Wire sensing.

Connect all leads to the output terminals as shown in the figure on the left.

Calibration Set-up

The following figures show the calibration test set-ups. Connect all leads to the Output terminals as shown in the following figures. Twist the + and - load leads to reduce noise and inductance.

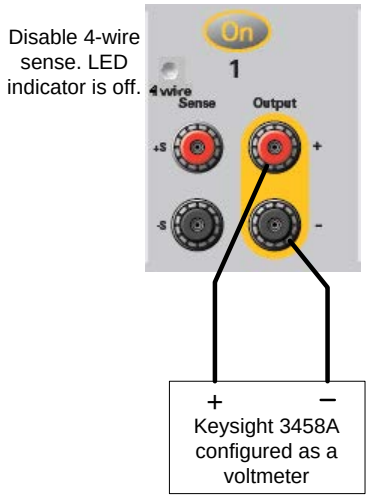

A.

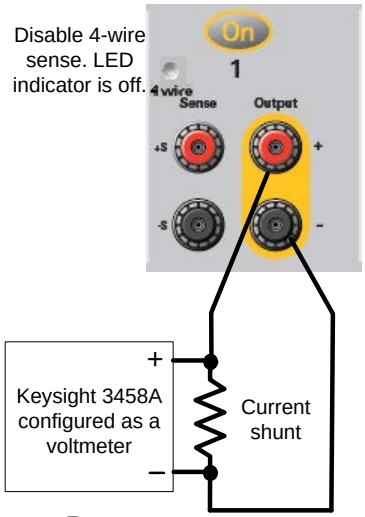

B.

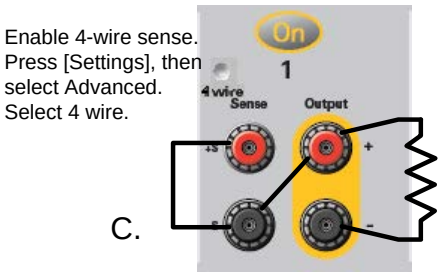

C.

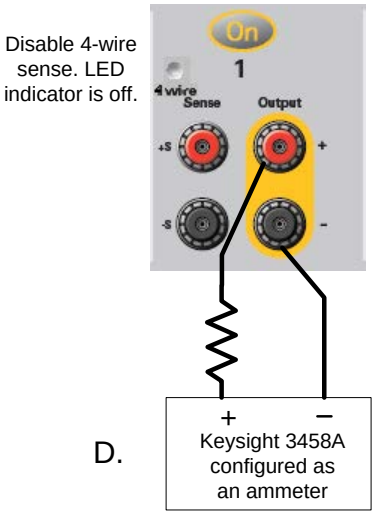

D.

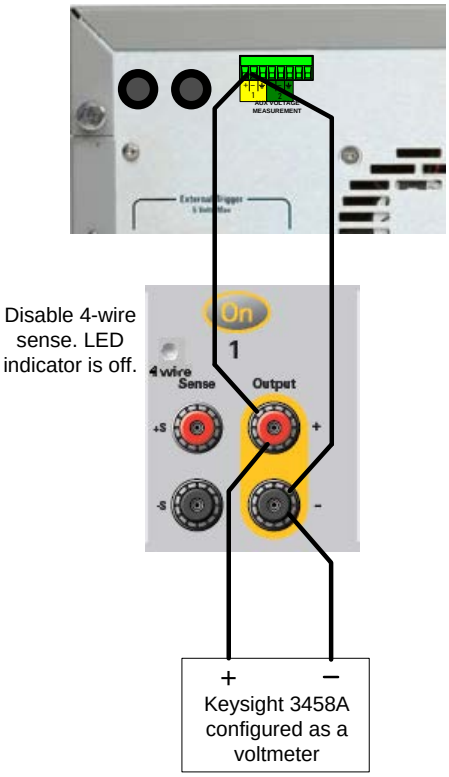

E.

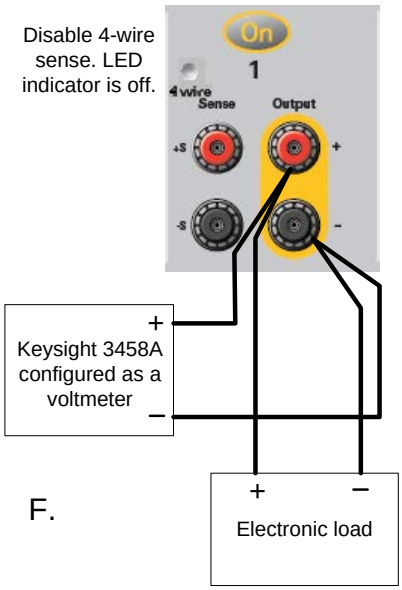

F.

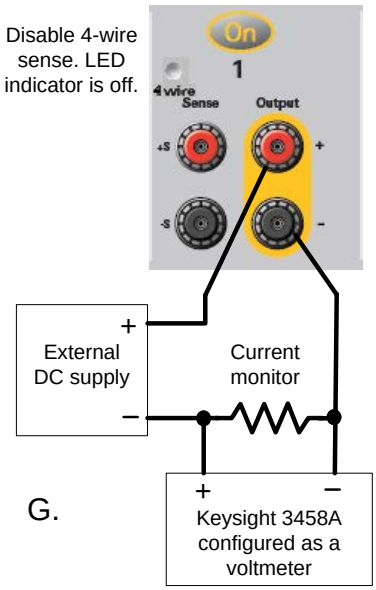

G.

Calibration Procedure – Models N673xB, N674xB, N677xA

Enter Calibration mode

Front Panel:	SCPI Command:
Press [Menu], then select Utilities, Administrative Tools, Administrator Login. Enter your numeric password in the PIN field and select Login. Then select the Calibration menu. Select Turn On/Off to access the menu items.	`CAL:STAT ON, <password>`

Voltage Calibration

High Range Programming and Measurement

Step 1. Connect the voltage input of the Keysight 3458A DMM to an output channel (see Cal Setup A).

Step 2. Select the full-scale voltage programming and measurement range. The value entered must be the maximum voltage of the range that you are calibrating. The following example selects the 60 V full-scale range of output 1. Full-scale ranges vary according to model.

Front Panel:	SCPI Command:
From the Calibration menu, select Voltage, High Range Prog and Meas. Then select Start.	`CAL:VOLT 60, (@1)`

Step 3. Select the first voltage calibration point.

Front Panel:	SCPI Command:
The first calibration point is automatically selected. “Enter P1 measured data” should be displayed.	`CAL:LEV P1` `*OPC?`

Step 4. Measure the output voltage with the DMM and enter the data.

Front Panel:	SCPI Command:
Enter the value from the external DMM into the data field and then select Next.	`CAL:DATA <data>`

Step 5. Select the second voltage calibration point.

Front Panel:	SCPI Command:
The second calibration point is automatically selected. “Enter P2 measured data” should be displayed.	`CAL:LEV P2` `*OPC?`

Step 6. Measure the output voltage with the DMM and enter the data.

Front Panel:	SCPI Command:
Enter the value from the external DMM into the data field and then select Next. When calibration is complete, select Close.	`CAL:DATA <data>`

Current Calibration

High Range Programming and Measurement

The output voltage may go negative at some point during this procedure on units that have polarity reversal relays (Option 760).

Step 1. Connect a precision shunt resistor to the output. The shunt resistor should be able to measure at least 120% of the output's full-scale current (see Cal setup B). Connect the Keysight 3458A DMM across the shunt resistor.

Step 2. Select the full-scale current programming range. The value to program a range must be the maximum current of the range. The following example selects the 5 A full-scale range of output 1. Full-scale ranges vary according to model.

Front Panel:	SCPI Command:
From the Calibration menu, select Current, High Range Prog and Meas. Then select Start.	`CAL:CURR 5, (@1)`

Step 3. Select the first current calibration point.

Front Panel:	SCPI Command:
The first calibration point is automatically selected. "Enter P1 measured data" should be displayed.	`CAL:LEV P1` `*OPC?`

Step 4. Calculate the shunt current (I=V/R) and enter the data.

Front Panel:	SCPI Command:
Enter the calculated value into the data field and then select Next.	`CAL:DATA <data>`

Step 5. Select the second current calibration point.

Front Panel:	SCPI Command:
The second calibration point is automatically selected "Enter P2 measured data" should be displayed.	`CAL:LEV P2` `*OPC?`

Step 6. Calculate the shunt current (I=V/R) and enter the data.

Front Panel:	SCPI Command:
Enter the calculated value into the data field and then select Next. When calibration is complete, select Close.	`CAL:DATA <data>`

Enter a Calibration Date

Front Panel:	SCPI Command:
From the Calibration menu, select Date. Enter the date in the format "yyyy/mm/dd". Then select Insert Date. Then select Close.	To enter a calibration date: `CAL:DATE "<date>", (@1)`

Save and Log out of Calibration Mode

CAUTION Storing calibration constants overwrites the existing ones in non-volatile memory. If you are not sure you want to permanently store the new constants, do not Save the data when you exit the calibration mode. The calibration will then remain unchanged.

Front Panel:	SCPI Command:

From the Calibration menu, select Save. Then select Save Calibration for all Outputs. Select Close.
Go [Back] to the Administrative tools menu and select Administrator Login. Select Logout, then Close
	To save calibration data:
	`CAL:SAVE`
	To exit calibration mode:
	`CAL:STAT OFF`

Calibration Procedure – Models N675xA

Enter Calibration mode

Front Panel:	SCPI Command:
Press [Menu], then select Utilities, Administrative Tools, Administrator Login. Enter your numeric password in the PIN field and select Login. Then select the Calibration menu. Select Turn On/Off to access the menu items.	`CAL:STAT ON, <password>`

Voltage Calibration

High Range Programming and Measurement

Step 1. Connect the voltage input of the Keysight 3458A to an output channel (see Cal Setup A).

Step 2. Select the full-scale voltage programming and measurement range. The value entered must be the maximum voltage of the range that you are calibrating. This example selects the 50 V full-scale range of output 1. Full-scale ranges vary according to model.

Front Panel:	SCPI Command:
From the Calibration menu, select Voltage, High Range Prog and Meas. Then select Start.	`CAL:VOLT 50, (@1)`

Step 3. Select the first voltage calibration point.

Front Panel:	SCPI Command:
The first calibration point is automatically selected. “Enter P1 measured data” should be displayed.	`CAL:LEV P1` `*OPC?`

Step 4. Measure the output voltage with the DMM and enter the data.

Front Panel:	SCPI Command:
Enter the value from the external DMM into the data field and then select Next.	`CAL:DATA <data>`

Step 5. Select the second voltage calibration point.

Front Panel:	SCPI Command:
The second calibration point is automatically selected. “Enter P2 measured data” should be displayed.	`CAL:LEV P2` `*OPC?`

Step 6. Measure the output voltage with the DMM and enter the data.

Front Panel:	SCPI Command:
Enter the value from the external DMM into the data field and then select Next. When calibration is complete, select Close.	`CAL:DATA <data>`

Voltage Common Mode Rejection Ratio Calibration

Step 1. For this step, make the connections shown in Cal Setup C.
Connect an external jumper between the +sense and the –sense terminals. Connect a second jumper from the +output to the –sense terminal. For models N6751A and N6752A only, connect a 25 Ω load resistor across the +output and –output terminals.

This procedure is automatic and only takes a few seconds.

Front Panel:	SCPI Command:
From the Calibration menu, select Miscellaneous, Common Mode Rejection Ratio, then Start. Then select Close.	`CAL:VOLT:CMRR (@1)` `*OPC?`

After calibration completes, disconnect all jumpers and resistors.

Current Calibration

High Range Programming and Measurement

The output voltage may go negative at some point during this procedure on units that have polarity reversal relays (Option 760).

Step 1. Connect a precision shunt resistor to the output. The shunt resistor should be able to measure at least 120% of the output's full-scale current (see Cal Setup B). Connect the Keysight 3458A across the shunt resistor.

Step 2. Select the full-scale current programming range. The value to program a range must be the maximum current of the range. This example selects the 5 A full-scale range of output 1. Full-scale ranges vary by model.

Front Panel:	SCPI Command:
From the Calibration menu, select Current, High Range Prog and Meas. Then select Start.	`CAL:CURR 5, (@1)`

Step 3. Select the first current calibration point.

Front Panel:	SCPI Command:
The first calibration point is automatically selected. "Enter P1 measured data" should be displayed.	`CAL:LEV P1` `*OPC?`

Step 4. Calculate the shunt current (I=V/R) and enter the data.

Front Panel:	SCPI Command:
Enter the calculated value into the data field and then select Next.	`CAL:DATA <data>`

Step 5. Select the second current calibration point.

Front Panel:	SCPI Command:
The second calibration point is automatically selected "Enter P2 measured data" should be displayed.	`CAL:LEV P2` `*OPC?`

Step 6. Calculate the shunt current (I=V/R) and enter the data.

Front Panel:	SCPI Command:
Enter the calculated value into the data field and then select Next. When calibration is complete, select Close.	`CAL:DATA <data>`

Peak Current Limit Calibration

Note that for models N6753A through N6756A, the peak current limit calibration is valid for 5 years.

Step 1. Connect only the electronic load or equivalent resistor (up to 500W rating) across the output terminals for the first calibration point:

Model	1st calibration point	2nd calibration point
N6751A /N6752A:	25 Ω resistor (do not use electronic load)	4 Ω resistor (do not use electronic load)
N6753A:	Electronic load set to 26.25A, CC mode (0.6 Ω equivalent, including lead resistance)	Electronic load set to 13.12A, CC mode (1.2 Ω equivalent, including lead resistance)
N6754A:	Electronic load set to 10.5A, CC mode (3.8 Ω equivalent, including lead resistance)	Electronic load set to 5.25A, CC mode (7.6 Ω equivalent, including lead res.)
N6755A:	Electronic load set to 43.75A, CC mode (0.37 Ω equivalent, including lead resistance)	Electronic load set to 21.88A, CC mode (0.73Ω equivalent, including lead resistance)
N6756A:	Electronic load set to 17.5A, CC mode (2.3 Ω equivalent, including lead resistance)	Electronic load set to 8.75A, CC mode (8.75Ω equivalent, including lead resistance)

Step 2. Select peak current limit calibration.

Front Panel:	SCPI Command:
From the Calibration menu, select Miscellaneous, Peak Current Limit. Then select Start.	`CAL:CURR:PEAK (@1)`

Step 3 Select the first current calibration point.

Front Panel:	SCPI Command:
The calibration is automatic.	`CAL:LEV P1` `*OPC?`

Step 4. Set the electronic load or connect the appropriate resistor for the second calibration point.

Step 5. Select the second current calibration point.

Front Panel:	SCPI Command:
Select Next. The calibration is automatic. Then select Close.	`CAL:LEV P2` `*OPC?`

Downprogrammer Calibration

Step 1. Remove all loads from the output. This procedure is automatic and takes a few seconds.

Front Panel:	SCPI Command:
From the Calibration menu, select Miscellaneous, Downprogrammer, then Start. Then select Close.	`CAL:DPRog (@1)` `*OPC?`

Enter a Calibration Date

Front Panel:	SCPI Command:
From the Calibration menu, select Date. Enter the date in the format “yyyy/mm/dd”. Then select Insert Date. Then select Close.	To enter a calibration date: `CAL:DATE “<date>”, (@1)`

Save and Log out of Calibration Mode

CAUTION Storing calibration constants overwrites the existing ones in non-volatile memory. If you are not sure you want to permanently store the new constants, do not Save the data when you exit the calibration mode. The calibration will then remain unchanged.

Front Panel:	SCPI Command:

From the Calibration menu, select Save. Then select Save Calibration for all Outputs. Select Close.
Go [Back] to the Administrative tools menu and select Administrator Login. Select Logout, then Close
	To save calibration data:
	`CAL:SAVE`
	To exit calibration mode:
	`CAL:STAT OFF`

Calibration Procedure – Models N676xA

Warm-up Period for Models N6761A and N6762A

Models N6761A and N6762A require a 30-minute warm-up period in the reset (*RST) state before starting calibration.

Enter Calibration mode

Front Panel:	SCPI Command:
Press [Menu], then select Utilities, Administrative Tools, Administrator Login. Enter your numeric password in the PIN field and select Login. Then select the Calibration menu. Select Turn On/Off to access the menu items.	`CAL:STAT ON, <password>`

Voltage Calibration

High Range Programming and Measurement

Step 1. Connect the voltage input of the Keysight 3458A to an output channel (see Cal Setup A).

Step 2. Select the full-scale voltage programming and measurement range. The value entered must be the maximum voltage of the range that you are calibrating. This example selects the 50 V full-scale range of output 1. Full-scale ranges vary according to model.

Front Panel:	SCPI Command:
From the Calibration menu, select Voltage, High Range Prog and Meas. Then select Start.	`CAL:VOLT 50, (@1)`

Step 3. Select the first voltage calibration point.

Front Panel:	SCPI Command:
The first calibration point is automatically selected. “Enter P1 measured data” should be displayed.	`CAL:LEV P1` `*OPC?`

Step 4. Measure the output voltage with the DMM and enter the data.

Front Panel:	SCPI Command:
Enter the value from the external DMM into the data field and then select Next.	`CAL:DATA <data>`

Step 5. Select the second voltage calibration point.

Front Panel:	SCPI Command:
The second calibration point is automatically selected. “Enter P2 measured data” should be displayed.	`CAL:LEV P2` `*OPC?`

Step 6. Measure the output voltage with the DMM and enter the data.

Front Panel:	SCPI Command:
Enter the value from the external DMM into the data field and then select Next. When calibration is complete, select Close.	`CAL:DATA <data>`

Low Range Voltage Programming

Step 1. Select the low-voltage programming range. The value entered must be the maximum voltage of the range to be calibrated. This example selects the 5 V range of output 1.

Front Panel:	SCPI Command:
From the Calibration menu, select Voltage, Low Range Programming. Then select Start.	`CAL:VOLT 5, (@1)`

Step 2. Select the first voltage calibration point.

Front Panel:	SCPI Command:
The first calibration point is automatically selected. “Enter P1 measured data” should be displayed.	`CAL:LEV P1` `*OPC?`

Step 3. Measure the output voltage with the DMM and enter the data. This value may be positive or negative.

Front Panel:	SCPI Command:
Enter the value from the external DMM into the data field and then select Next.	`CAL:DATA <data>`

Step 4. Select the second voltage calibration point.

Front Panel:	SCPI Command:
The second calibration point is automatically selected. “Enter P2 measured data” should be displayed.	`CAL:LEV P2` `*OPC?`

Step 5. Measure the output voltage with the DMM and enter the data.

Front Panel:	SCPI Command:
Enter the value from the external DMM into the data field and then select Next. When calibration is complete, select Close.	`CAL:DATA <data>`

Low Range Voltage Measurement

Step 1. Select the low-voltage measurement range. The value entered must be the maximum voltage of the range to be calibrated. This example selects the 5 V measurement range of output 1.

Front Panel:	SCPI Command:
From the Calibration menu, select Voltage, Low Range Measurement. Then select Start.	`CAL:VOLT:MEAS 5, (@1)`

Step 2. Select the first voltage calibration point.

Front Panel:	SCPI Command:
The first calibration point is automatically selected. “Enter P1 measured data” should be displayed.	`CAL:LEV P1` `*OPC?`

Step 3. Measure the output voltage with the DMM and enter the data.

Front Panel:	SCPI Command:
Enter the value from the external DMM into the data field and then select Next.	`CAL:DATA <data>`

Step 4. Select the second voltage calibration point.

Front Panel:	SCPI Command:
The second calibration point is automatically selected. “Enter P2 measured data” should be displayed.	`CAL:LEV P2` `*OPC?`

Step 5. Measure the output voltage with the DMM and enter the data.

Front Panel:	SCPI Command:
Enter the value from the external DMM into the data field and then select Next. When calibration is complete, select Close.	`CAL:DATA <data>`

Voltage Common Mode Rejection Ratio Calibration

Step 1. For this step, make the connections shown in Cal Setup C.
Connect an external jumper between the +sense and the –sense terminals. Connect a second jumper from the +output to the –sense terminal. For models N6761A and N6762A only, connect a 25 Ω load resistor across the +output and –output terminals.

This procedure is automatic and only takes a few seconds.

Front Panel:	SCPI Command:
From the Calibration menu, select Miscellaneous, Common Mode Rejection Ratio, then Start. Then select Close.	`CAL:VOLT:CMRR (@1)` `*OPC?`

After calibration completes, disconnect all jumpers and resistors.

Current Calibration

High Range Programming and Measurement

The output voltage may go negative at some point during this procedure on units that have polarity reversal relays (Option 760).

Step 1. Connect a precision shunt resistor to the output. The shunt resistor should be able to measure at least 120% of the output's full-scale current (see Cal Setup B). Connect the Keysight 3458A across the shunt resistor.

Step 2. Select the full-scale current programming range. The value to program a range must be the maximum current of the range. This example selects the 3 A full-scale range of output 1. Full-scale ranges vary according to model.

Front Panel:	SCPI Command:
From the Calibration menu, select Current, High Range Prog and Meas. Then select Start.	`CAL:CURR 3, (@1)`

Step 3. Select the first current calibration point.

Front Panel:	SCPI Command:
The first calibration point is automatically selected. "Enter P1 measured data" should be displayed.	`CAL:LEV P1` `*OPC?`

Step 4. Calculate the shunt current (I=V/R) and enter the data.

Front Panel:	SCPI Command:
Enter the calculated value into the data field and then select Next.	`CAL:DATA <data>`

Step 5. Select the second current calibration point.

Front Panel:	SCPI Command:
The second calibration point is automatically selected “Enter P2 measured data” should be displayed.	`CAL:LEV P2` `*OPC?`

Step 6. Calculate the shunt current (I=V/R) and enter the data.

Front Panel:	SCPI Command:
Enter the calculated value into the data field and then select Next. Then select Close.	`CAL:DATA <data>`

Low Range Current Programming

Step 1. Connect only the current measurement terminals of the Keysight 3458A to the output terminals.

Step 2. Select the low-current programming range. The value to program a range must be the maximum current of the range. This example selects the 100 mA range of output 1.

Front Panel:	SCPI Command:
From the Calibration menu, select Current, Low Range Programming. Then select Start.	`CAL:CURR 0.1, (@1)`

Step 3. Select the first current calibration point. Wait a minimum of 5 minutes for the output current to stabilize.

Front Panel:	SCPI Command:
The first calibration point is automatically selected. “Enter P1 measured data” should be displayed.	`CAL:LEV P1` `*OPC?`

Step 4. Measure the current with the Keysight 3458A and enter the value.

Front Panel:	SCPI Command:
Enter the value from the external DMM into the data field and then select Next.	`CAL:DATA <data>`

Step 5. Select the second current calibration point. Wait a minimum of 30 seconds for the output current to stabilize.

Front Panel:	SCPI Command:
The second calibration point is automatically selected. “Enter P2 measured data” should be displayed.	`CAL:LEV P2` `*OPC?`

Step 6. Measure the current with the Keysight 3458A and enter the value.

Front Panel:	SCPI Command:
Enter the value from the external DMM into the data field and then select Next. Then select Close.	`CAL:DATA <data>`

Low Range Current Measurement

Step 1. Connect only the current measurement terminals of the Keysight 3458A to the output terminals.

Step 2. Select the low-current measurement range. The value to program a range must be the maximum current of the range. This example selects the 100 mA range of output 1.

Front Panel:	SCPI Command:
From the Calibration menu, select Current, Low Range Measurement. Then select Start.	`CAL:CURR:MEAS 0.1, (@1)`

Step 3. Select the first current calibration point. For models N6761A and N6762A **only**, wait a minimum of 5 minutes for the internal temperature to stabilize.

Front Panel:	SCPI Command:
The first calibration point is automatically selected. The ammeter should be connected. Wait 5 minutes for models N6761A and N6762A. Select Next. “Enter measured current” should be displayed.	`CAL:LEV P1`

Step 4. Measure the current with the Keysight 3458A and enter the value.

Front Panel:	SCPI Command:
Enter the value from the external DMM into the data field and then select Next. If calibration is complete, select Close.	`CAL:DATA <data>` `*OPC?`

Steps 5 and 6 only apply to models N6761A and N6762A.

Step 5. Disconnect the Keysight 3458A from the output terminals. Then select the second current calibration point.

Front Panel:	SCPI Command:
The second calibration point is automatically selected. “Disconnect Meter” should be displayed. Select Next when done.	`CAL:LEV P2`

Step 6. Wait a minimum of 5 minutes for the internal temperature to stabilize. Then select the third current calibration point.

Front Panel:	SCPI Command:
The third calibration point is automatically selected. “Wait 5 minutes, press Next” should be displayed. Wait 5 minutes and select Next. Then select Close.	`CAL:LEV P3` `*OPC?`

100 uA/200 uA Range Measurement – for Option 1UA or 2UA only

Step 1. Remove all loads from the output.

Step 2. Select either the 100 µA current measurement range or the 200 µA measurement range. Then wait 10 seconds.

Front Panel:	SCPI Command:

From the Calibration menu, select Current, 1UA/2UA Option Range Meas. Then select Start.	`CAL:CURR:MEAS 0.0001, (@1)`
	`*OPC?` or
	`CAL:CURR:MEAS 0.0002, (@1)`
	`*OPC?`

Step 3. Select the first current calibration point.

Front Panel:	SCPI Command:
The first calibration point is automatically selected. “Waiting 10 seconds” should be displayed.	`CAL:LEV P1`

Step 4. Connect the Keysight 3458A and a 20 k Ω resistor to the output (see equipment list in chapter 2 and Cal Setup D).

Step 5. Measure the output current with the Keysight 3458A and enter the value.

Front Panel:	SCPI Command:
Select the Measured Data field. Enter the data from the external DMM and then select Next. Select Close to finish calibration.	`CAL:DATA <data>` `*OPC?`

Peak Current Limit Calibration

Note that for models N6763A through N6766A, the peak current limit calibration is valid for 5 years.

Step 1. Connect only the electronic load or equivalent resistor (up to 500W rating) across the output terminals for the first calibration point:

Model	1st calibration point	2nd calibration point
N6761A /N6762A:	25 Ω resistor (do not use electronic load)	4 Ω resistor (do not use electronic load)
N6763A:	Electronic load set to 26.25A, CC mode (0.6 Ω equivalent, including lead resistance)	Electronic load set to 13.12A, CC mode (1.2 Ω equivalent, including lead resistance)
N6764A:	Electronic load set to 10.5A, CC mode (3.8 Ω equivalent, including lead resistance)	Electronic load set to 5.25A, CC mode (7.6 Ω equivalent, including lead res.)
N6765A:	Electronic load set to 43.75A, CC mode (0.37 Ω equivalent, including lead resistance)	Electronic load set to 21.88A, CC mode (0.73Ω equivalent, including lead resistance)
N6766A:	Electronic load set to 17.5A, CC mode (2.3 Ω equivalent, including lead resistance)	Electronic load set to 8.75A, CC mode (8.75Ω equivalent, including lead resistance)

Step 2. Select peak current limit calibration.

Front Panel:	SCPI Command:
From the Calibration menu, select Miscellaneous, Peak Current Limit. Then select Start.	`CAL:CURR:PEAK (@1)`

Step 3 Select the first current calibration point.

Front Panel:	SCPI Command:
The calibration is automatic.	`CAL:LEV P1` `*OPC?`

Step 4. Set the electronic load or connect the appropriate resistor for the second calibration point.

Step 5. Select the second current calibration point.

Front Panel:	SCPI Command:
Select Next. The calibration is automatic. Then select Close.	`CAL:LEV P2` `*OPC?`

Downprogrammer Calibration

Step 1. Remove all loads from the output. This procedure is automatic and takes a few seconds.

Front Panel:	SCPI Command:
From the Calibration menu, select Miscellaneous, Downprogrammer. Select Start. Then select Close.	`CAL:DPRog (@1)` `*OPC?`

Enter a Calibration Date

Front Panel:	SCPI Command:
From the Calibration menu, select Date. Enter the date in the format “yyyy/mm/dd”. Then select Insert Date. Then select Close.	To enter a calibration date: `CAL:DATE “<date>”, (@1)`

Save and Log out of Calibration Mode

CAUTION Storing calibration constants overwrites the existing ones in non-volatile memory. If you are not sure you want to permanently store the new constants, do not Save the data when you exit the calibration mode. The calibration will then remain unchanged.

Front Panel:	SCPI Command:

From the Calibration menu, select Save. Then select Save Calibration for all Outputs. Select Close.
Go [Back] to the Administrative tools menu and select Administrator Login. Select Logout, then Close
	To save calibration data:
	`CAL:SAVE`
	To exit calibration mode:
	`CAL:STAT OFF`

Calibration Procedure – Models N678xA SMU

Enter Calibration mode

Front Panel:	SCPI Command:
Press [Menu], then select Utilities, Administrative Tools, Administrator Login. Enter your numeric password in the PIN field and select Login. Then select the Calibration menu. Select Turn On/Off to access the menu items.	`CAL:STAT ON, <password>`

Voltage Calibration

High Range Programming and Measurement - All Models

Step 1. Connect the voltage input of the Keysight 3458A to an output channel (see Cal Setup A).

Step 2. Select the full-scale voltage programming and measurement range. The value entered must be the maximum voltage of the range that you are calibrating. This example selects the 20 V full-scale range of output 1.

Front Panel:	SCPI Command:
From the Calibration menu, select Voltage, High Range Prog and Meas. Then select Start.	`CAL:VOLT 20, (@1)`

Step 3. Select the first voltage calibration point.

Front Panel:	SCPI Command:
The first calibration point is automatically selected. “Enter P1 measured data” should be displayed.	`CAL:LEV P1` `*OPC?`

Step 4. Measure the output voltage with the DMM and enter the data. This value may be positive or negative.

Front Panel:	SCPI Command:
Enter the value from the external DMM into the data field and then select Next.	`CAL:DATA <data>`

Step 5. Select the second voltage calibration point.

Front Panel:	SCPI Command:
The second calibration point is automatically selected. “Enter P2 measured data” should be displayed.	`CAL:LEV P2` `*OPC?`

Step 6. Measure the output voltage with the DMM and enter the data.

Front Panel:	SCPI Command:
Enter the value from the external DMM into the data field and then select Next. If calibration is complete, select Close.	`CAL:DATA <data>`

Steps 7 and 8 only apply to model N6784A.

Step 7. Select the third voltage calibration point for the negative range.

Front Panel:	SCPI Command:
The third calibration point is automatically selected. “Enter P3 measured data” should be displayed.	`CAL:LEV P3` `*OPC?`

Step 8. Measure the output voltage with the DMM and enter the data. The value should be negative.

Front Panel:	SCPI Command:
Enter the value from the external DMM into the data field and then select Next. When calibration is complete, select Close.	`CAL:DATA <data>`

Low Range Voltage Programming - Models N6781A, N6782A, N6784A

Step 1. Select the low-voltage programming range. The value entered must be the maximum voltage of the range to be calibrated. This example selects the 6 V range of output 1.

Front Panel:	SCPI Command:
From the Calibration menu, select Voltage, Low Range Programming. Then select Start.	`CAL:VOLT 6, (@1)`

Step 2. Select the first voltage calibration point.

Front Panel:	SCPI Command:
The first calibration point is automatically selected. “Enter P1 measured data” should be displayed.	`CAL:LEV P1` `*OPC?`

Step 3. Measure the output voltage with the DMM and enter the data. This value may be positive or negative.

Front Panel:	SCPI Command:
Enter the value from the external DMM into the data field and then select Next.	`CAL:DATA <data>`

Step 4. Select the second voltage calibration point.

Front Panel:	SCPI Command:
The second calibration point is automatically selected. “Enter P2 measured data” should be displayed.	`CAL:LEV P2` `*OPC?`

Step 5. Measure the output voltage with the DMM and enter the data.

Front Panel:	SCPI Command:
Enter the value from the external DMM into the data field and then select Next. If calibration is complete, select Close.	`CAL:DATA <data>`

Step 6 only applies to models N6781A and N6782A.

Step 6. Repeat steps 1 through 5 for the 600 mV range.

Steps 7 through 9 only apply to model N6784A.

Step 7. Select the third voltage calibration point for the negative range.

Front Panel:	SCPI Command:
The third calibration point is automatically selected. “Enter P3 measured data” should be displayed.	`CAL:LEV P3` `*OPC?`

Step 8. Measure the output voltage with the DMM and enter the data. The value should be negative.

Front Panel:	SCPI Command:
Enter the value from the external DMM into the data field and then select Next. When calibration is complete, select Close	`CAL:DATA <data>`

Step 9. Repeat steps 1 through 5, 7 and 8 for the 600 mV range.

Low Range Voltage Measurement - Models N6781A, N6782A, N6784A

Step 1. Select the low-voltage measurement range. The value entered must be the maximum voltage of the range to be calibrated. This example selects the 1 V range of output 1.

Front Panel:	SCPI Command:
From the Calibration menu, select Voltage, Low Range Measurement. Then select Start.	`CAL:VOLT:MEAS 1, (@1)`

Step 2. Select the first voltage calibration point.

Front Panel:	SCPI Command:
The first calibration point is automatically selected. “Enter P1 measured data” should be displayed.	`CAL:LEV P1` `*OPC?`

Step 3. Measure the output voltage with the DMM and enter the data. This value may be positive or negative.

Front Panel:	SCPI Command:
Enter the value from the external DMM into the data field and then select Next.	`CAL:DATA <data>`

Step 4. Select the second voltage calibration point.

Front Panel:	SCPI Command:
The second calibration point is automatically selected. “Enter P2 measured data” should be displayed.	`CAL:LEV P2` `*OPC?`

Step 5. Measure the output voltage with the DMM and enter the data.

Front Panel:	SCPI Command:
Enter the value from the external DMM into the data field and then select Next. When calibration is complete, select Close.	`CAL:DATA <data>`

Step 6 only applies to models N6781A and N6782A.

Step 6. Repeat steps 1 through 5 for the 100 mV range.

Steps 7 through 9 only apply to model N6784A.

Step 7. Select the third voltage calibration point for the negative range.

Front Panel:	SCPI Command:
The third calibration point is automatically selected. “Enter P3 measured data” should be displayed.	`CAL:LEV P3` `*OPC?`

Step 8. Measure the output voltage with the DMM and enter the data. The value should be negative.

Front Panel:	SCPI Command:
Enter the value from the external DMM into the data field and then select Next. When calibration is complete, select Close.	`CAL:DATA <data>`

Step 9. Repeat steps 1 through 5, 7 and 8 for the 100 mV range.

Positive Voltage Limit - Models N6781A, N6782A, N6784A

Step 1. Select the positive voltage limit range. The value to program a range must be the maximum voltage of the range to be calibrated. This example selects the 20 V positive limit range of output 1.

Front Panel:	SCPI Command:
From the Calibration menu, select Voltage, Positive Voltage Limit. Then select Start. Select the 20 V range.	`CAL:VOLT:LIM:POS 20, (@1)`

Step 2. Select the first voltage calibration point.

Front Panel:	SCPI Command:
The first calibration point is automatically selected. “Enter P1 measured data” should be displayed.	`CAL:LEV P1` `*OPC?`

Step 3. Measure the output voltage with the DMM and enter the data.

Front Panel:	SCPI Command:
Enter the value from the external DMM into the data field and then select Next.	`CAL:DATA <data>`

Step 4. Select the second voltage calibration point.

Front Panel:	SCPI Command:
The second calibration point is automatically selected. “Enter P2 measured data” should be displayed.	`CAL:LEV P2` `*OPC?`

Step 5. Measure the output voltage with the DMM and enter the data.

Front Panel:	SCPI Command:
Enter the value from the external DMM into the data field and then select Next. When calibration is complete, select Close.	`CAL:DATA <data>`

Step 6. Repeat steps 1 through 5 for the 6 V positive limit range.

Auxiliary Voltage Measurement – Models N6781A, N6785A

Step 1. Connect the auxiliary input terminals to the output terminals of model N6781A. Also connect the voltage input of the Keysight 3458A to the output terminals of model N6781A (see Cal Setup E).

Step 2. Select the auxiliary voltage measurement input.

Front Panel:	SCPI Command:
From the Calibration menu, select Voltage, Aux Measurement. Then select Start.	`CAL:VOLT:MEAS:AUX (@1)`

Step 3. Select the first voltage calibration point.

Front Panel:	SCPI Command:
The first calibration point is automatically selected. “Enter P1 measured data” should be displayed.	`CAL:LEV P1` `*OPC?`

Step 4. Measure the output voltage with the DMM and enter the data. This value may be positive or negative.

Front Panel:	SCPI Command:
Enter the value from the external DMM into the data field and then select Next.	`CAL:DATA <data>`

Step 5. Select the second voltage calibration point.

Front Panel:	SCPI Command:
The second calibration point is automatically selected. “Enter P2 measured data” should be displayed.	`CAL:LEV P2` `*OPC?`

Step 6. Measure the output voltage with the DMM and enter the data.

Front Panel:	SCPI Command:
Enter the value from the external DMM into the data field and then select Next.	`CAL:DATA <data>`

Step 7. Select the third voltage calibration point for the negative range.

Front Panel:	SCPI Command:
The third calibration point is automatically selected. “Enter P3 measured data” should be displayed.	`CAL:LEV P3` `*OPC?`

Step 8. Measure the output voltage with the DMM and enter the data. The value should be negative.

Front Panel:	SCPI Command:
Enter the value from the external DMM into the data field and then select Next. When calibration is complete, select Close.	`CAL:DATA <data>`

Current Calibration

High Range Programming and Measurement - All Models

Do not connect anything to the Sense terminals.

Step 1. Connect a precision shunt resistor to the output. The shunt resistor should be able to measure at least 120% of the output's rated full-scale current (see Cal Setup B). Connect the Keysight 3458A across the shunt resistor.

Step 2. Select the full-scale current programming range. The value to program a range must be the maximum current of the range. This example selects the 8 A full-scale range of output 1.

For models N6781A, N6782A, and N6784A, select the 3 A range - which *calibrates both the 3 A and 1 A ranges.*

Front Panel:	SCPI Command:

From the Calibration menu, select Current, High Range Prog and Meas. Then select Start.	For N6785A, N6786A
	`CAL:CURR 8, (@1)`
	For N6781A, N6782A, N6784A
	`CAL:CURR 3, (@1)`

Step 3. Select the first current calibration point.

Front Panel:	SCPI Command:
The first calibration point is automatically selected "Enter P1 measured data" should be displayed.	`CAL:LEV P1` `*OPC?`

Step 4. Calculate the shunt current (I=V/R) and enter the data. This value may be positive or negative.

Front Panel:	SCPI Command:
Enter the calculated value into the data field and then select Next.	`CAL:DATA <data>`

Step 5. Select the second current calibration point. Wait a minimum of 5 minutes for the internal temperature to stabilize.

Front Panel:	SCPI Command:
The second calibration point is automatically selected "Wait 5 minutes, press Next" should be displayed. Wait 5 minutes and select Next. "Enter P2 measured data" should be displayed.	`CAL:LEV P2` `*OPC?`

Step 6. Calculate the shunt current (I=V/R) and enter the data.

Front Panel:	SCPI Command:
Enter the calculated value into the data field and then select Next.	`CAL:DATA <data>`

Step 7. Select the third voltage calibration point for the negative range.

Front Panel:	SCPI Command:
The third calibration point is automatically selected. “Enter P3 measured data” should be displayed.	`CAL:LEV P3` `*OPC?`

Step 8. Calculate the shunt current (I=V/R) and enter the data. The value should be negative.

Front Panel:	SCPI Command:
Enter the calculated value into the data field and then select Next. When calibration is complete, select Close	`CAL:DATA <data>`

Low Range Current Programming - Models N6781A, N6782A, N6784A

Step 1. Connect only the current measurement terminals of the Keysight 3458A to the output terminals (see Cal Setup D without the resistor).

Step 2. Select the low-current programming range. The value to program a range must be the maximum current of the range. Models N6781A and N6782A have 300 mA range. Model N6784A has a 100 mA and a 10 mA range. This example selects the 300 mA programming range of output 1. For model N6784A, select the 100 mA programming range.

Front Panel:	SCPI Command:
From the Calibration menu, select Current, Low Range Programming. Then select Start.	`CAL:CURR 0.3, (@1)`

Step 3. Select the first current calibration point.

Front Panel:	SCPI Command:
The first calibration point is automatically selected. “Enter P1 measured data” should be displayed.	`CAL:LEV P1` `*OPC?`

Step 4. Measure the current with the Keysight 3458A and enter the value. This value may be positive or negative.

Front Panel:	SCPI Command:
Enter the value from the external DMM into the data field and then select Next.	`CAL:DATA <data>`

Step 5. Select the second current calibration point.

Front Panel:	SCPI Command:
The second calibration point is automatically selected. “Enter P2 measured data” should be displayed.	`CAL:LEV P2` `*OPC?`

Step 6. Measure the current with the Keysight 3458A and enter the value.

Front Panel:	SCPI Command:
Enter the value from the external DMM into the data field and then select Next.	`CAL:DATA <data>`

Step 7. Select the third current calibration point for the negative range.

Front Panel:	SCPI Command:
The third calibration point is automatically selected. “Enter P3 measured data” should be displayed.	`CAL:LEV P3` `*OPC?`

Step 8. Measure the current with the Keysight 3458A and enter the value. This value should be negative.

Front Panel:	SCPI Command:
Enter the value from the external DMM into the data field and then select Next. When calibration is complete, select Close.	`CAL:DATA <data>`

Step 9. Repeat steps 1 through 8 for the 10 mA programming range of model N6784A.

100 mA Measurement Range - All Models

Step 1. Connect only the current measurement terminals of the Keysight 3458A to the output terminals (see Cal Setup D without the resistor).

Step 2. Select the 100 mA range of output 1.

Front Panel:	SCPI Command:
From the Calibration menu, select Current, 100 mA Measurement Range. Then select Start.	`CAL:CURR:MEAS 0.1, (@1)`

Step 3. Select the first current calibration point.

Front Panel:	SCPI Command:
The first calibration point is automatically selected. “Enter P1 measured data” should be displayed.	`CAL:LEV P1` `*OPC?`

Step 4. Measure the current with the Keysight 3458A and enter the value.

Front Panel:	SCPI Command:
Enter the value from the external DMM into the data field and then select Next.	`CAL:DATA <data>`

Step 5. Select the second current calibration point.

Front Panel:	SCPI Command:
The second calibration point is automatically selected. “Enter P2 measured data” should be displayed.	`CAL:LEV P2` `*OPC?`

Step 6. Measure the current with the Keysight 3458A and enter the value. This value should be negative.

Front Panel:	SCPI Command:
Enter the value from the external DMM into the data field and then select Next. When calibration is complete, select Close.	`CAL:DATA <data>`

1 mA Measurement Range - All Models

Step 1. Connect the Keysight 3458A in series with a 10 kΩ resistor to the output (see equipment list in chapter 2 and Cal Setup D).

Step 2. Select the 1 mA range of output 1.

Front Panel:	SCPI Command:
From the Calibration menu, select Current, I mA Measurement Range. Select Start.	`CAL:CURR:MEAS` `0.001, (@1)`

Step 3. Select the first current calibration point.

Front Panel:	SCPI Command:
The first calibration point is automatically selected. “Enter P1 measured data” should be displayed.	`CAL:LEV P1` `*OPC?`

Step 4. Measure the current with the Keysight 3458A and enter the value.

Front Panel:	SCPI Command:
Enter the value from the external DMM into the data field and then select Next.	`CAL:DATA <data>`

Step 5. Select the second current calibration point.

Front Panel:	SCPI Command:
The second calibration point is automatically selected. “Enter P2 measured data” should be displayed.	`CAL:LEV P2` `*OPC?`

Step 6. Measure the current with the Keysight 3458A and enter the value. This value should be negative.

Front Panel:	SCPI Command:
Enter the value from the external DMM into the data field and then select Next. When calibration is complete, select Close.	`CAL:DATA <data>`

10 µA Measurement Range - Models N6781A, N6782A, N6784A

Step 1. Connect the Keysight 3458A in series with a 1 MΩ resistor to the output (see equipment list in chapter 2 and Cal Setup D). Set the Keysight 3458A to measure current using the 100 µA range (no autoranging). The remote command to do this is "DCI 100e-6".

Step 2. Select the 10 µA measurement range of output 1.

Front Panel:	SCPI Command:
From the Calibration menu, select Current, 10 µA Measurement Range. Then select Start.	`CAL:CURR:MEAS 0.00001, (@1)`

Step 3. Select the first current calibration point.

Front Panel:	SCPI Command:
The first calibration point is automatically selected. "Enter P1 measured data" should be displayed.	`CAL:LEV P1` `*OPC?`

Step 4. Measure the current with the Keysight 3458A and enter the value.

Front Panel:	SCPI Command:
Enter the value from the external DMM into the data field and then select Next.	`CAL:DATA <data>`

Step 5. Select the second current calibration point.

Front Panel:	SCPI Command:
The second calibration point is automatically selected. "Enter P2 measured data" should be displayed.	`CAL:LEV P2` `*OPC?`

Step 6. Measure the current with the Keysight 3458A and enter the value. This value should be negative.

Front Panel:	SCPI Command:
Enter the value from the external DMM into the data field and then select Next. When calibration is complete, select Close.	`CAL:DATA <data>`

Current Limit – All Models

CAUTION This procedure calibrates the POSITVE current limit for Models N6781A, N6782A, and N6784A. It calibrates the NEGATIVE current limit for Models N6785A and N6786A.

Step 1. Connect a precision shunt resistor to the output. The shunt resistor should be able to measure at least 120% of the output's rated full-scale current (see Cal Setup B). Connect the Keysight 3458A across the shunt resistor.

Step 2. Select the 3 A current limit of output 1 for models N6781A, N6782A, and N6784A. Select the -8A current limit of output 1 for models N6785A and N6786A.

Front Panel:	SCPI Command:

From the Calibration menu, select Current, Current Limit. Then select Start.	For N6781A, N6782A, N6784A
	`CAL:CURR:LIM:POS 3, (@1`
	For N6785A, N6786A
	`CAL:CURR:LIM:NEG -8, (@1)`

Step 3. Select the first current calibration point.

Front Panel:	SCPI Command:
The first calibration point is automatically selected. "Enter P1 measured data" should be displayed.	`CAL:LEV P1` `*OPC?`

Step 4. Calculate the shunt current (I=V/R) and enter the data.

Front Panel:	SCPI Command:
Enter the calculated value into the data field and then select Next.	`CAL:DATA <data>`

Step 5. Select the second voltage calibration point. Wait 5 minutes for the internal temperature to stabilize before continuing.

Front Panel:	SCPI Command:
The second calibration point is automatically selected. "Wait 5 minutes, press Next" should be displayed. Wait 5 minutes and select Next. "Enter P2 measured data" should be displayed.	`CAL:LEV P2` `*OPC?`

Step 6. Calculate the shunt current (I=V/R) and enter the data.

Front Panel:	SCPI Command:
Enter the calculated value into the data field and then select Next. When calibration is complete, select Close.	`CAL:DATA <data>`

Resistance Calibration - Models N6781A, N6785A

Step 1. Connect an electronic load directly to the output (see Cal Setup F). Set the load to constant current mode, current to 0.95A. Also connect the Keysight 3458A to the output terminals.

Step 2. Select the 20 V resistance range of output 1.

Front Panel:	SCPI Command:
From the Calibration menu, select Miscellaneous Resistance, 20 V Range. Then select Start.	`CAL:RES 20 (@1)` `*OPC?`

Step 3. Select the first resistance calibration point.

Front Panel:	SCPI Command:
The first calibration point is automatically selected. “Enter P1 measured data” should be displayed.	`CAL:LEV P1` `*OPC?`

Step 4. Measure the output voltage with the DMM and enter the data.

Front Panel:	SCPI Command:
Enter the value from the external DMM into the data field and then select Next.	`CAL:DATA <data>`

Step 5. Select the second resistance calibration point.

Front Panel:	SCPI Command:
The second calibration point is automatically selected. “Enter P2 measured data” should be displayed.	`CAL:LEV P2` `*OPC?`

Step 6. Measure the output voltage with the DMM and enter the data.

Front Panel:	SCPI Command:
Enter the value from the external DMM into the data field and then select Next.	`CAL:DATA <data>`

Step 7. Select the third resistance calibration point.

Front Panel:	SCPI Command:
The third calibration point is automatically selected. “Enter P2 measured data” should be displayed.	`CAL:LEV P2` `*OPC?`

Step 8. Measure the output voltage with the DMM and enter the data.

Front Panel:	SCPI Command:
Enter the value from the external DMM into the data field and then select Next. When calibration is complete, select Close.	`CAL:DATA <data>`

Step 9. For Model N6781A repeat steps 1 through 8 for the 6 V resistance range of output 1.

Enter a Calibration Date

Front Panel:	SCPI Command:
From the Calibration menu, select Date. Enter the date in the format “yyyy/mm/dd”. Then select Insert Date. Then select Close.	To enter a calibration date: `CAL:DATE “<date>”, (@1)`

Save and Log out of Calibration Mode

CAUTION Storing calibration constants overwrites the existing ones in non-volatile memory. If you are not sure you want to permanently store the new constants, do not Save the data when you exit the calibration mode. The calibration will then remain unchanged.

Front Panel:	SCPI Command:

From the Calibration menu, select Save. Then select Save Calibration for all Outputs. Select Close.
Go [Back] to the Administrative tools menu and select Administrator Login. Select Logout, then Close
	To save calibration data:
	`CAL:SAVE`
	To exit calibration mode:
	`CAL:STAT OFF`

Calibration Procedure – Models N6783A-BDA and -MFG

Enter Calibration mode

Front Panel:	SCPI Command:
Press [Menu], then select Utilities, Administrative Tools, Administrator Login. Enter your numeric password in the PIN field and select Login. Then select the Calibration menu. Select Turn On/Off to access the menu items.	`CAL:STAT ON, <password>`

Voltage Calibration

High Range Programming and Measurement

Step 1. Connect the voltage input of the Keysight 3458A DMM to an output channel (see Cal Setup A).

Step 2. Select the full-scale voltage programming and measurement range. The value entered must be the maximum voltage of the range that you are calibrating. The following example selects the 6 V full-scale range of output 1. Full-scale ranges vary according to model.

Front Panel:	SCPI Command:
From the Calibration menu, select Voltage, High Range Prog and Meas. Then select Start.	`CAL:VOLT 6, (@1)`

Step 3. Select the first voltage calibration point.

Front Panel:	SCPI Command:
The first calibration point is automatically selected. “Enter P1 measured data” should be displayed.	`CAL:LEV P1` `*OPC?`

Step 4. Measure the output voltage with the DMM and enter the data.

Front Panel:	SCPI Command:
Enter the value from the external DMM into the data field and then select Next.	`CAL:DATA <data>`

Step 5. Select the second voltage calibration point.

Front Panel:	SCPI Command:
The second calibration point is automatically selected. “Enter P2 measured data” should be displayed.	`CAL:LEV P2` `*OPC?`

Step 6. Measure the output voltage with the DMM and enter the data.

Front Panel:	SCPI Command:
Enter the value from the external DMM into the data field and then select Next. When calibration is complete, select Close.	`CAL:DATA <data>`

Current Calibration

High Range Programming and Measurement

The output voltage may go negative at some point during this procedure on units that have polarity reversal relays (Option 760).

Step 1. Connect a precision shunt resistor to the output. The shunt resistor should be able to measure at least 120% of the output's full-scale current (see Cal setup B). Connect the Keysight 3458A DMM across the shunt resistor.

Step 2. Select the full-scale current programming range. The value to program a range must be the maximum current of the range. The following example selects the 3 A full-scale range of output 1. Full-scale ranges vary according to model.

Front Panel:	SCPI Command:
From the Calibration menu, select Current, High Range Prog and Meas. Then select Start.	`CAL:CURR 3, (@1)`

Step 3. Select the first current calibration point.

Front Panel:	SCPI Command:
The first calibration point is automatically selected. "Enter P1 measured data" should be displayed.	`CAL:LEV P1` `*OPC?`

Step 4. Calculate the shunt current (I=V/R) and enter the data.

Front Panel:	SCPI Command:
Enter the calculated value into the data field and then select Next.	`CAL:DATA <data>`

Step 5. Select the second current calibration point.

Front Panel:	SCPI Command:
The second calibration point is automatically selected "Enter P2 measured data" should be displayed.	`CAL:LEV P2` `*OPC?`

Step 6. Calculate the shunt current (I=V/R) and enter the data.

Front Panel:	SCPI Command:
Enter the calculated value into the data field and then select Next. When calibration is complete, select Close.	`CAL:DATA <data>`

Low Range Current Measurement

Step 1. Connect only the current measurement terminals of the Keysight 3458A to the output terminals (see Cal Setup D without the resistor).

Step 2. Select the low current measurement range. The value to program a range must be the maximum current of the range. This example selects the 0.15 A range of output 1.

Front Panel:	SCPI Command:
From the Calibration menu, select Current, Low Range Measurement. Then select Start.	`CAL:CURR:MEAS 0.15, (@1)`

Step 3. Select the first current calibration point.

Front Panel:	SCPI Command:
The first calibration point is automatically selected. The ammeter should be connected. Select Next. “Enter Measured Current” should be displayed.	`CAL:LEV P1` `*OPC?`

Step 4. Measure the current with the Keysight 3458A and enter the value.

Front Panel:	SCPI Command:
Enter the value from the external DMM into the data field and then select Next. When calibration is complete, select Close.	`CAL:DATA <data>` `*OPC?`

Negative Current Limit Calibration

Step 1. Connect the Keysight 3458A, current shunt, and a power supply to the output (see Test Setup G). Connect plus to plus, minus to minus. Set the external power supply to 3V, 3A.

Step 2. Select the negative-current range. The value to select the range must be negative and the maximum current of the range.

Front Panel:	SCPI Command:
From the Calibration menu, select Current, Low Range Measurement. Then select Start.	`CAL:CURR:LIM:NEG -2, (@1)`

Step 3. Select the first current calibration point.

Front Panel:	SCPI Command:
The first calibration point is automatically selected. “Enter P1 measured data” should be displayed.	`CAL:LEV P1` `*OPC?`

Step 4. Calculate the shunt current (I=V/R); enter the *negative* current value.

Front Panel:	SCPI Command:
Enter the value from the external DMM into the data field and then select Next.	`CAL:DATA <data>`

Step 5. Select the second current calibration point.

Front Panel:	SCPI Command:
The second calibration point is automatically selected “Enter P2 measured data” should be displayed.	`CAL:LEV P2` `*OPC?`

Step 6. Calculate the shunt current (I=V/R); enter the *negative* current value.

Front Panel:	SCPI Command:
Enter the value from the external DMM into the data field and then select Next. When calibration is complete, select Close.	`CAL:DATA <data>`

Enter a Calibration Date

Front Panel:	SCPI Command:
From the Calibration menu, select Date. Enter the date in the format “yyyy/mm/dd”. Then select Insert Date. Then select Close.	To enter a calibration date: `CAL:DATE “<date>”, (@1)`

Save and Log out of Calibration Mode

CAUTION Storing calibration constants overwrites the existing ones in non-volatile memory. If you are not sure you want to permanently store the new constants, do not Save the data when you exit the calibration mode. The calibration will then remain unchanged.

Front Panel:	SCPI Command:

From the Calibration menu, select Save. Then select Save Calibration for all Outputs. Select Close.
Go [Back] to the Administrative tools menu and select Administrator Login. Select Logout, then Close
	To save calibration data:
	`CAL:SAVE`
	To exit calibration mode:
	`CAL:STAT OFF`

Change the Admin/Calibration Password

The password must be numeric, and can be up to 15 digits in length. After it has been changed, you can only enter the calibration mode by providing the correct password.

If the password is lost or forgotten, access can be restored by setting an internal switch that resets the password to “0” (zero) (refer to “Accessing the Calibration switch” in chapter 4). Once you have set the password to “0” (zero) with the switch, you can enter a new password using Administrative Tools menu or using the CAL:PASS command. The new password will become active when you log out of the Admin Menu or send CAL:STAT OFF. After you have returned the switches to the normal position, you can access the Administrative Tools menu with the new password.

Front Panel:	SCPI Command:

Press [Menu], then select Utilities, Administrative Tools, Administrator Login.
Enter the original password (or zero if the switches have been set) in the Password field and press Select.
In the Administrative Tools menu, select Change Password. Enter the new password in the PIN field and select Close.
Logout of the Admin menu to activate the password.
	Enter calibration mode using the original password
	`CAL:STAT ON, <password>`
	To change the password:
	`CAL:PASS <NRf>`
	To exit calibration mode and activate the password:
	`CAL:STAT OFF`

NOTE

If the message “Locked out by internal switch setting” or “Calibration is inhibited by switch setting” appears, the internal switch is set to prevent the password from being changed (refer to “Accessing the Calibration switch” in chapter 4).

4
Disassembly

Electrostatic Discharge (ESD) Precautions 82
Disassembly Procedures 82

This chapter discusses the disassembly procedures for troubleshooting and repairing Keysight N6705 DC Power Analyzer mainframes.

Electrostatic Discharge (ESD) Precautions

Almost all electrical components can be damaged by electrostatic discharge (ESD) during handling. Component damage can occur at electrostatic discharge voltages as low as 50 volts. The following guidelines will help prevent ESD damage when servicing the instrument or any electronic device.

- Disassemble instruments *only* in a static-free work area.
- Use a conductive work area to reduce static charges.
- Use a conductive wrist strap to reduce static accumulation.
- Minimize handling.
- Keep replacement parts in original static-free packaging.
- Remove all plastic, foam, vinyl, paper, and other static-generating materials from the immediate work area.

Disassembly Procedures

WARNING SHOCK HAZARD. FAN HAZARD. Turn off the mainframe and disconnect its power cord before attempting any of the following procedures.

Required Disassembly Tools

Tool	Use
T10 Torx driver	All Disassemblies
T20 Torx driver	Removing Top Chassis, AC Module, Bulk Supply and Calibration
7/32 in. nut driver	Removing Ground Nut
1/4 in. nut driver	Removing Binding Post Assembly
11/32 in. nut driver	Removing Bulk Supply Cable
5/8 in. nut driver	Removing Trigger Assembly
Flat Blade driver	Replacing Battery and Calibration
Diagonal cutters	Removing top and bottom backplanes
Philips pozidrive	Removing side cover without handle

Removing/Installing Modules

Step 1. Remove the top (or bottom) covers.

Loosen the thumbscrews to remove the covers. Turn the unit upside-down to remove the bottom cover.

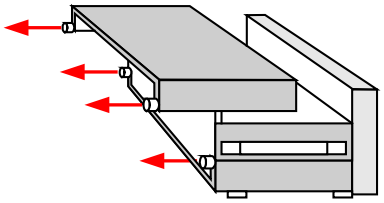

Figure 4-1

CAUTION Backplane connector pins are exposed in empty module slots. Ensure that the pins are protected from damage whenever the covers are removed.

Step 2. Remove the power modules.

First, remove the connector from the end of the module.

Then remove the two fastening screws at either end of the module. Grasp the module at the ends (near the fan and the output connector), and lift it straight up out of the mainframe.

Step 3. Install the power modules.

Align the module over the pins and push it down onto the connector.

Using a T10 Torx driver, install the two screws at each end of the module. Turn the unit upside-down to install more modules.

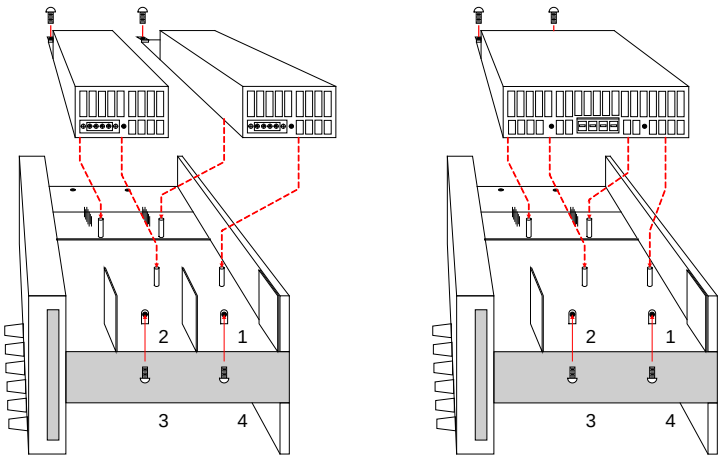

Figure 4-2

NOTE If you are installing a double-wide power module, you must first remove the center deflector. Use a T10 Torx to remove the top deflector; use a 5.5 mm hex to remove the bottom deflector. Install the deflector in the storage location on the opposite end of the module in case you need to re-use it in the future.

Step 4. Connect the output cables.

Push the harness connector into the power module. Use the correct size connector and channel for the power module (see Figure 4-2 for channel locations).

Tighten the locking screws on the small connectors.

Secure the unused cables in the plastic clip ring located between the modules and the front panel.

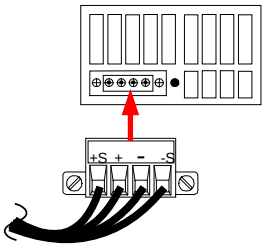

Figure 4-3

NOTE For double-wide power modules, connect the output 1 cable in the top chassis; connect the output 3 cable in the bottom chassis.

Step 5. Install the top and bottom covers.

Slide the top (or bottom) cover into place and tighten the thumbscrews.

Removing/Installing Flat Flexible Cables (FFC)

Note the position of the conductive side of the FFC cable for re-installation. The blue tab is on the non-conductive side of the cable.

To remove the FFC cable, gently lift up on the tabs located on the short ends of the plastic connector until the cable is released. Remove the cable.

To install the FFC cable, insert the cable into the slot in the connector. Using a small screwdriver or your fingers, apply gentle, even pressure to the tabs until the connector clicks and locks the cable into place. After installation, check the cable to ensure the cable is straight and securely aligned within the connector.

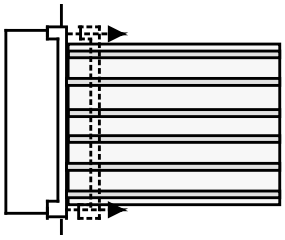

Figure 4-4

Accessing the Calibration switch

Step 1. Remove the right side cover (side with handle).

Remove the two screws with a Philips pozidrive along the right side of the unit. Then remove the screw at the back of the side panel using a T10 driver. Remove the panel. The calibration switches are visible through the cutout.

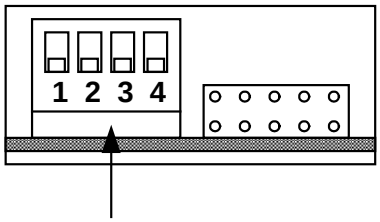

Figure 4-5

Step 2. The calibration switch is visible through the cutout.

To change the calibration switch settings, use a small screwdriver to move the switches. See Chapter 3 for detailed Calibration procedures.

CAUTION Do not use a pencil to move the switches. Any graphite dust that accumulates on the switches will conduct electricity.

Switches 1 and 2 set the calibration configuration as follows:

	Switch 1	Switch 2	Description
Normal	DOWN	DOWN	This is the default or as-shipped switch setting. The calibration functions are accessible after entering a numeric password. The default password is 0 (zero).
Clear password	UP	DOWN	The password is reset to 0 when the instrument is turned on. Use this setting if you have forgotten the password.
Inhibit calibration	UP	UP	All calibration commands are disabled. This is useful where calibration access is guarded by instrument seals.

Step 3. Replace the side cover when finished.

Replacing the Battery

The internal battery powers the real-time clock. The primary function of the clock it to provide a time stamp for the internal file system. If the battery fails, the clock and time stamp function will not be available. No other instrument functions are affected.

Under normal use at room temperature, the lithium battery has a life expectancy between seven and ten years. Note that battery life will be reduced if the instrument is stored for a prolonged period at temperatures above 40 degrees C.

The part number of the battery is Panasonic CR 2032.

Step 1. Remove the top cover.

Loosen the thumbscrews to remove the top cover. The battery is located right behind the front panel assembly.

Step 2. Lift the clip and remove the battery.

Use a small flat-blade screwdriver and carefully lift the clip. Remove the battery.

Step 3. Install the new battery.

Insert the new battery. Make sure that the positive side (+) is facing up. Release the clip.

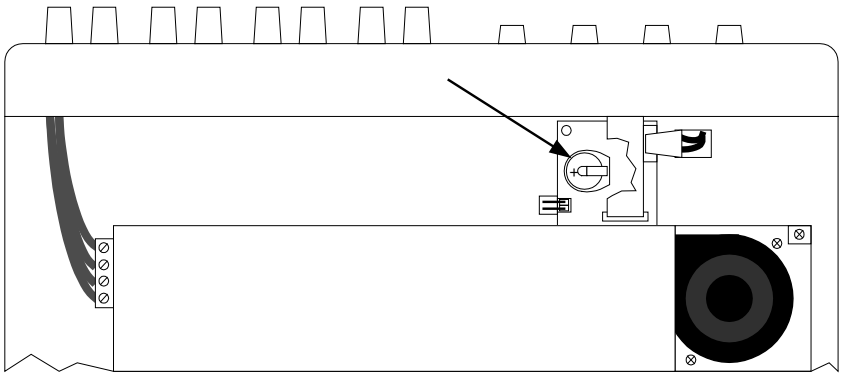

Figure 4-6

Step 4. Reset the date and time.

Reassemble the unit and turn it on. Access the Utilities menu, select User Preferences, then Clock Setup. Set the date and time.

CAUTION Properly dispose of the old battery in accordance with local l and regulations.

Removing/Installing the Top Chassis

Step 1. Remove the top cover and any modules as previously described.

Step 2. Remove the two side panels.

The handle side requires a T20 driver (see Figure 4-7). The other side panel requires a Philips pozidrive head (see Figure 4-8). There is also a screw (T10) that needs to be removed from the rear of each side panel.

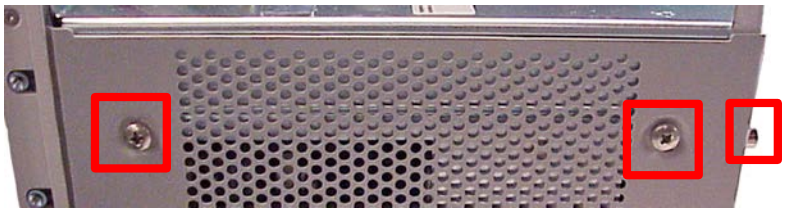

Figure 4-7. Right Side Panel

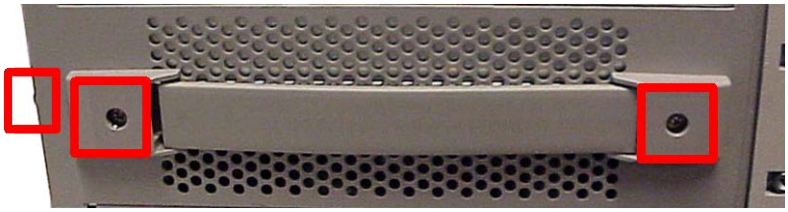

Figure 4-8. Left Side Panel

Step 3. Remove three screws using a T10 driver from the rear panel.

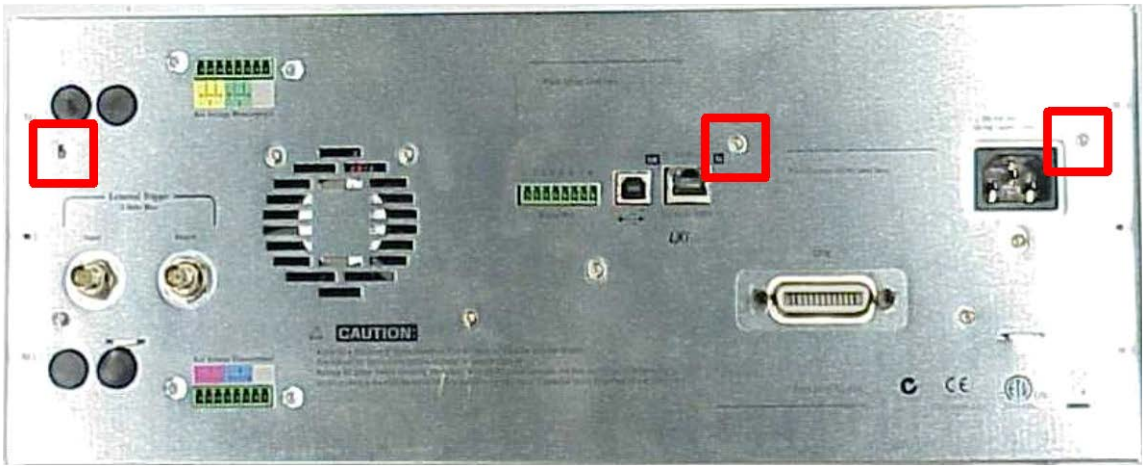

Figure 4-9

Step 4. Remove three screws using a T10 driver from the front panel sub assembly.

Figure 4-10

Step 5. Disconnect the four cables from the backplane assembly.

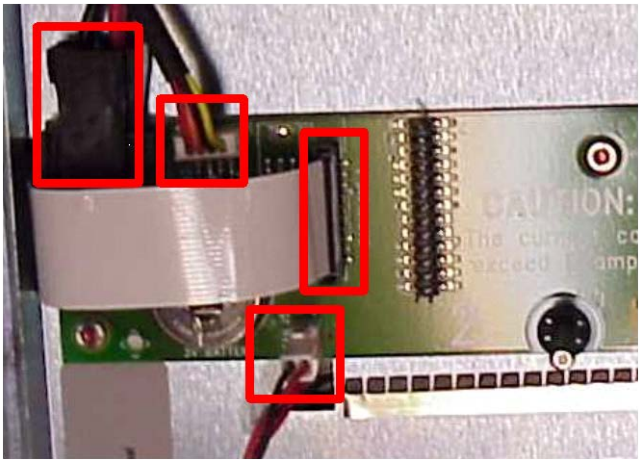

Figure 4-11

Step 6. Remove the top chassis.

Angle the top chassis so you can maneuver around the fin attached to the rear panel. To completely disconnect the top chassis, unwrap the front panel cable harnesses from the ferrite cores.

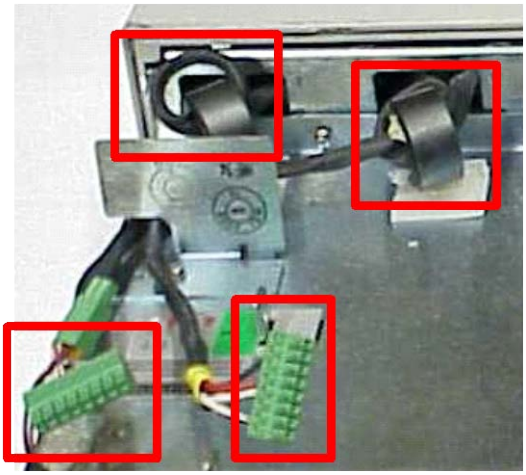

Figure 4-12

Step 7. To install the top chassis, perform steps 1-6 in reverse order. Be sure to tuck all cables in before replacing the top chassis.

Removing/Installing the Bias PCA

Step 1. Remove the top chassis as previously described.

Step 2. Remove three screws using a T10 driver and disconnect five cables.

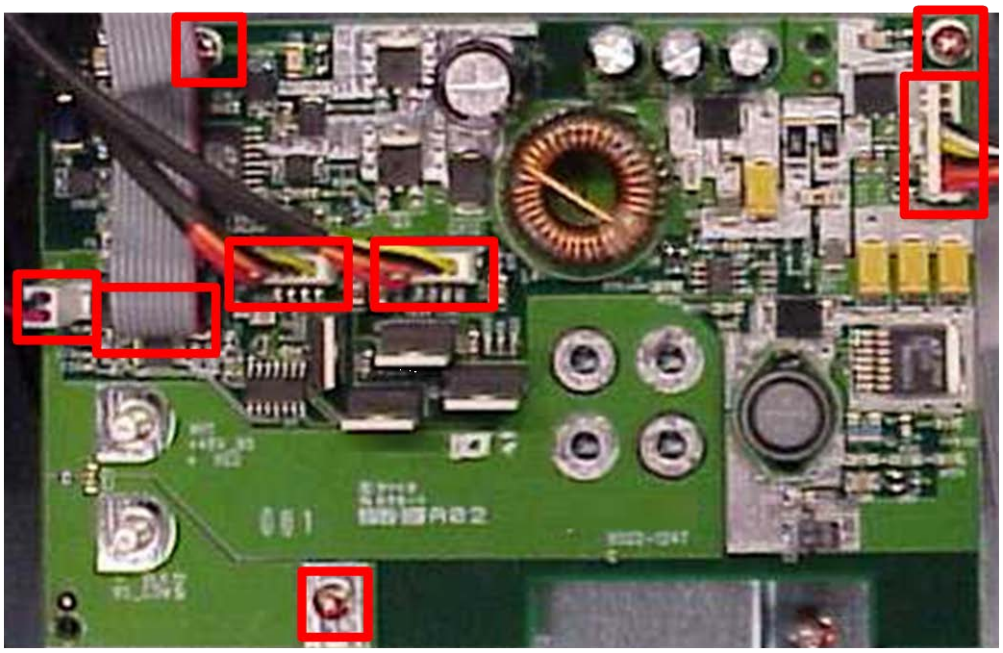

Figure 4-13

Step 3. Remove the bias PCA.

Step 4. To install the bias PCA, perform steps 1-3 in reverse order.

Removing/Installing the PPMC (Interface) PCA

Step 1. Remove the top chassis as previously described.

Step 2. Disconnect the eight cables and remove six screws using a T10 driver.

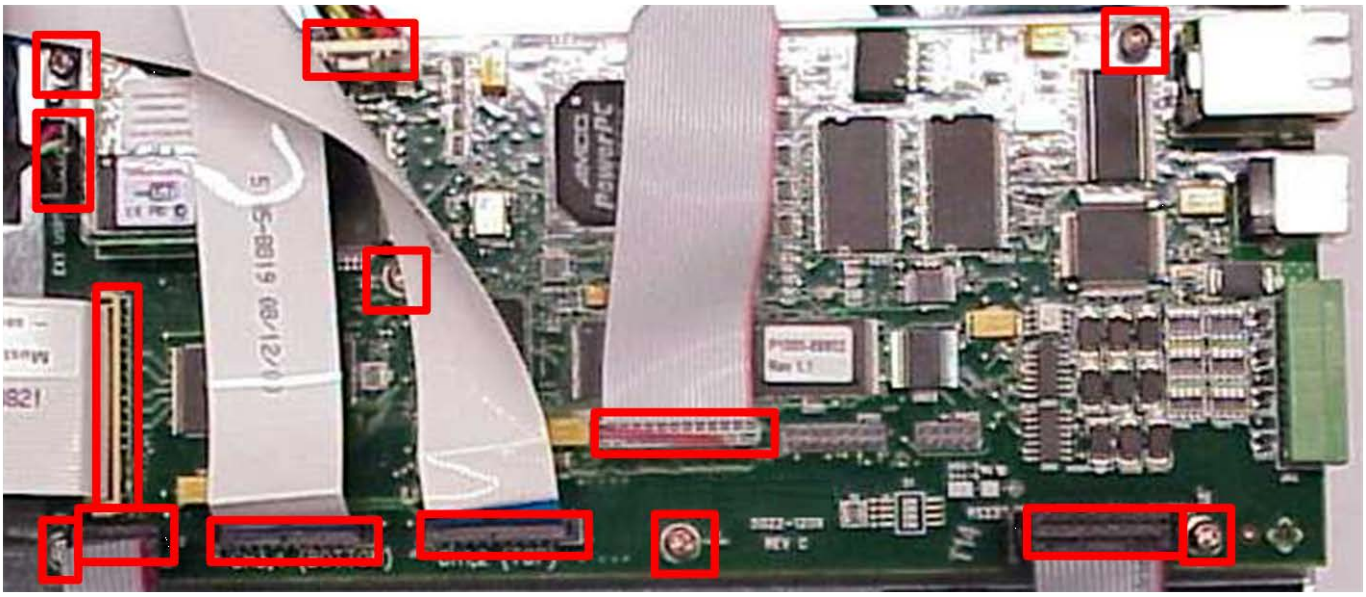

Figure 4-14

Step 3. Remove the PPMC PCA by sliding forward and lifting.

Step 4. To install the PPMC PCA, perform steps 1-3 in reverse order.

Removing/Installing the AC Module

Step 1. Remove the top chassis as previously described.

Step 2. Remove the screw using a T10 driver from the rear panel located beneath the AC receptacle.

Figure 4-15

Step 3. Disconnect the two connections and remove two screws using a T20 driver from the AC Module.

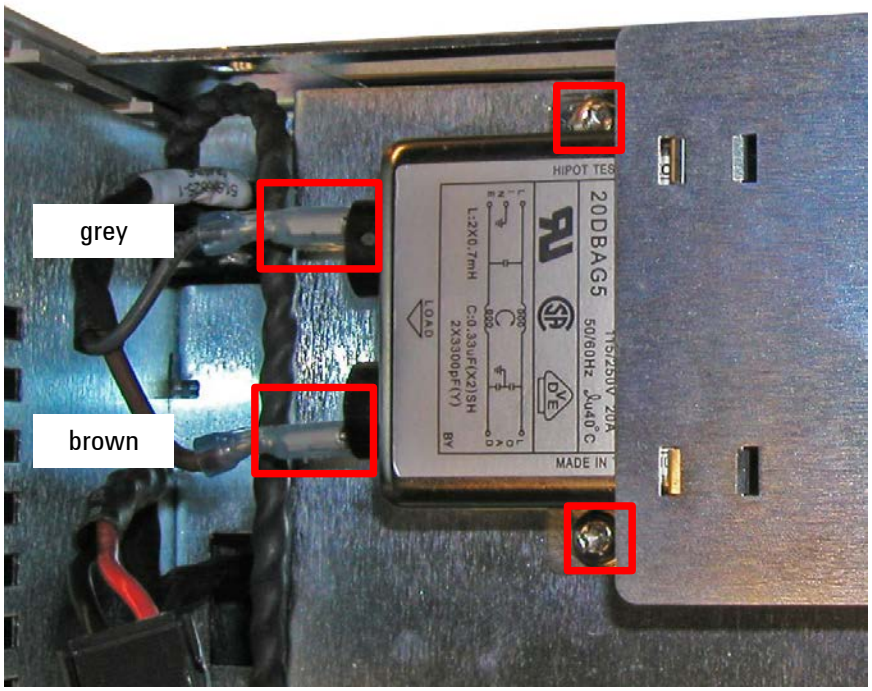

Figure 4-16

Step 4. Remove the AC Module.

Step 5. To install the AC Module, perform steps 1-4 in reverse order.

Removing/Installing the Bulk Supply

Step 1. Remove the top chassis, PPMC PCA, Bias PCA, and AC Module as previously described.

Step 2. Remove one screw using a T10 driver from the rear panel.

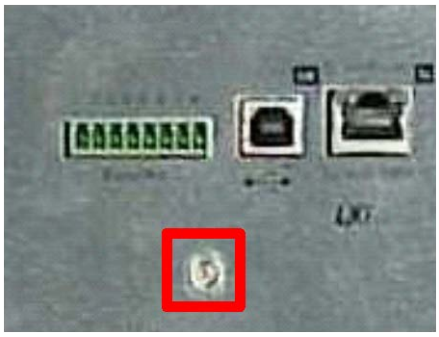

Figure 4-17

Step 3. Unhook the cable tie and remove four screws using a T20 driver.

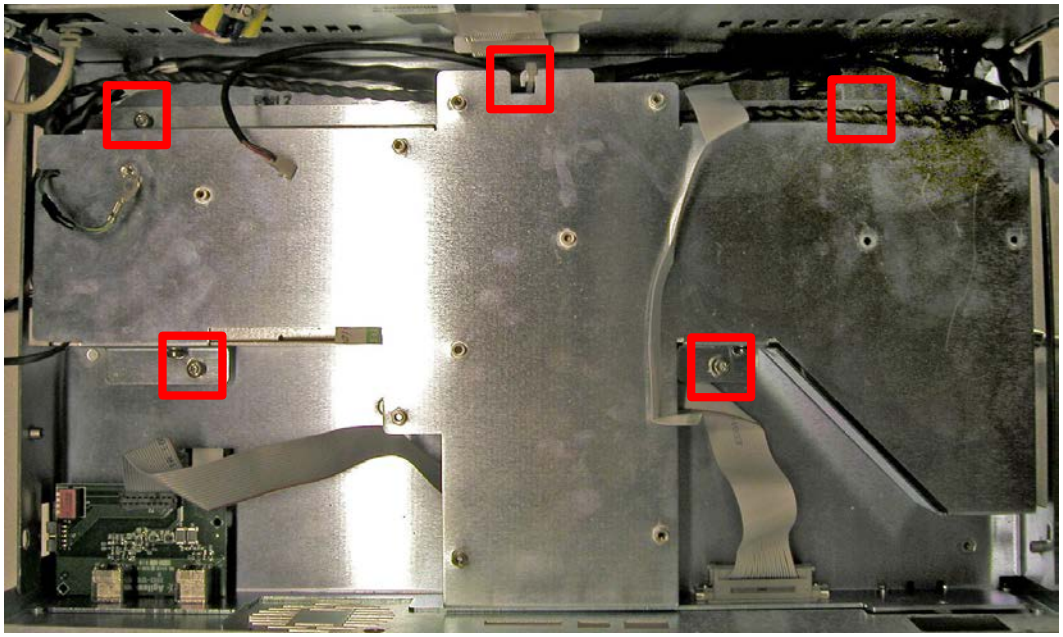

Figure 4-18

Step 4. Remove four screws using a T20 driver from the sides of the bulk shroud and remove the bulk shroud.

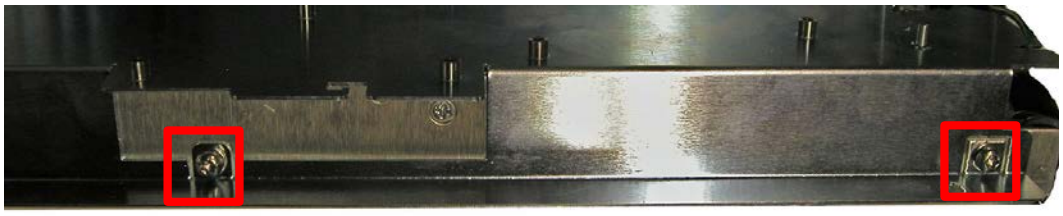

Figure 4-19

Figure 4-20

Step 5. Disconnect four connections and remove two 11/32 in. nuts from the bulk supply.

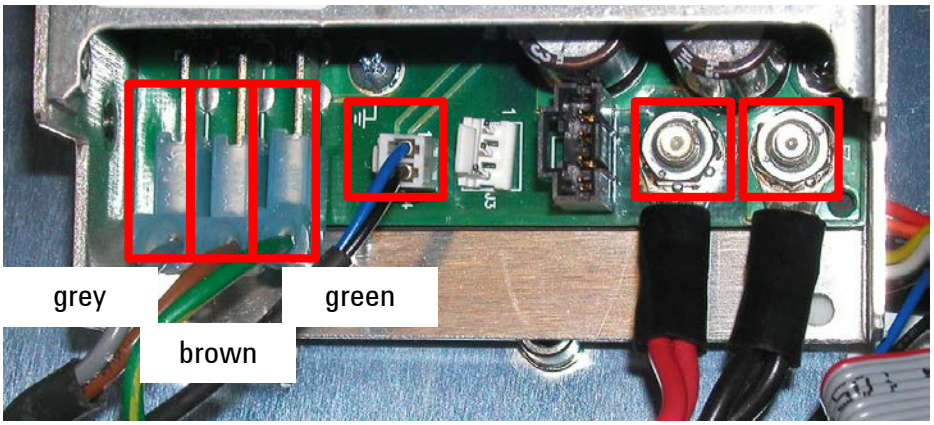

Figure 4-21

Step 6. Remove the bulk supply.

Step 7. To install the bulk supply, perform steps 1-6 in reverse order.

Removing/Installing the Trigger Assembly

Step 1. Remove the top chassis as previously described.

Step 2. Remove the two 5/8 in. nuts from the binding posts.

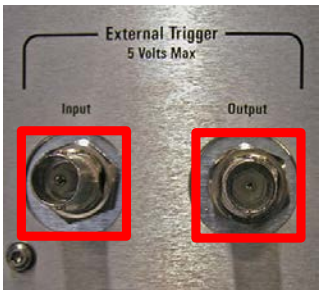

Figure 4-22

Step 3. Remove the trigger assembly.

Step 4. To install the trigger assembly, perform steps 1-3 in reverse order.

Removing/Installing the Top Backplane PCA

Step 1. Remove the top chassis as previously described.

Step 2. Remove three screws using a T10 driver from the chassis on the side opposite to the backplane PCA.

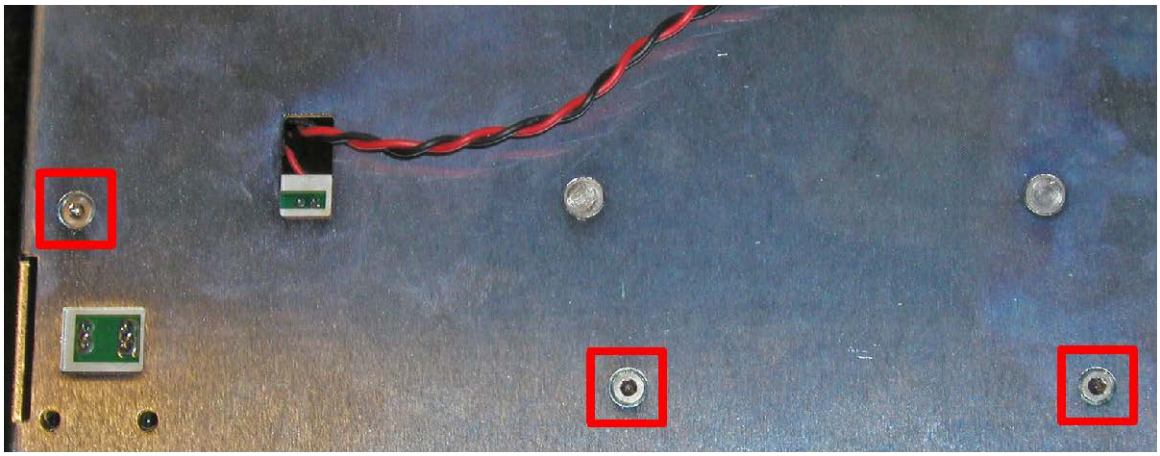

Figure 4-23

Step 3. Disconnect any remaining cables if required, and either cut or carefully slide the two push-on retainers off of the retaining pins.

Figure 4-24

Step 4. Remove the top backplane PCA.

Step 5. To install the top backplane PCA, perform steps 1-4 in reverse order. New push-on retainers can be purchased separately.

Removing/Installing the Bottom Backplane PCA

Step 1. Remove top chassis as previously described.

Step 2. Remove bottom cover as previously described.

Step 3. Remove two screws using a T10 driver from the back panel. (one to the AC module and the other to the bulk shroud).

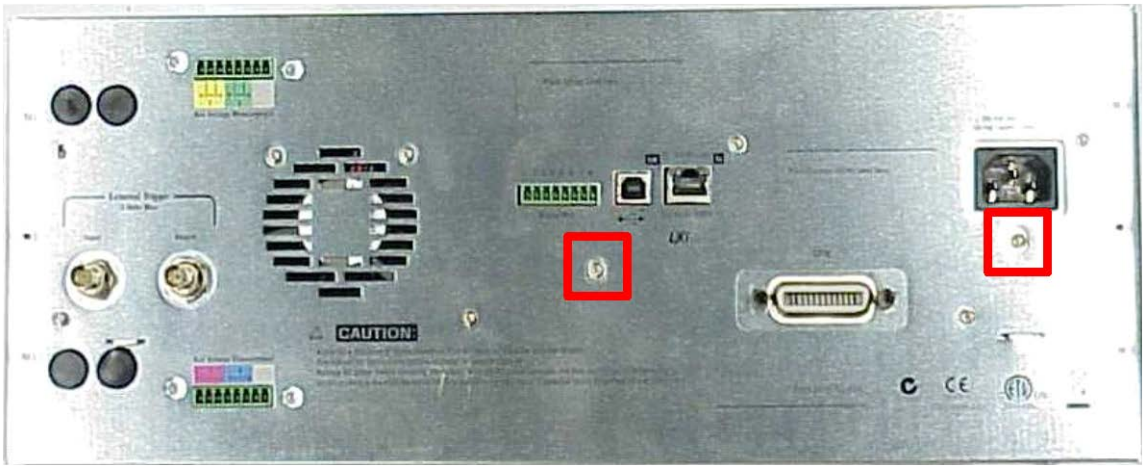

Figure 4-25

Step 4. Disconnect seven cables from the PPMC PCA and the two contacts to the AC module.

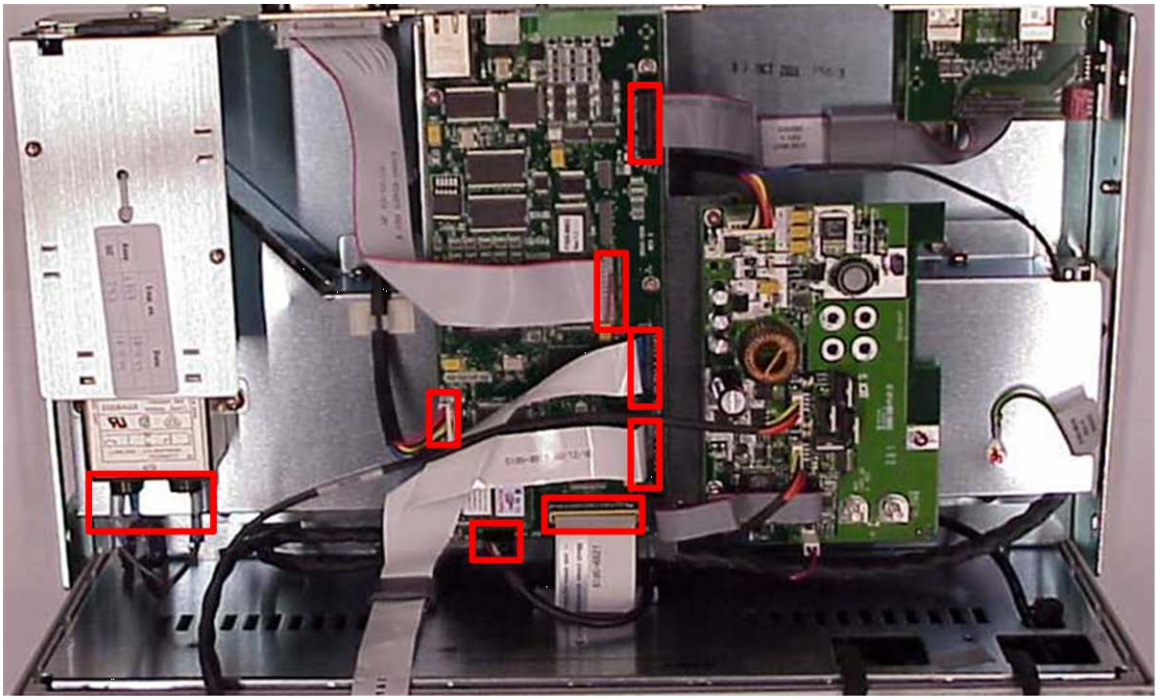

Figure 4-26

Step 5. Unhook the cable tie from the bulk shroud and remove four screws using a T20 driver. (Figure shows PCA boards removed for clarity)

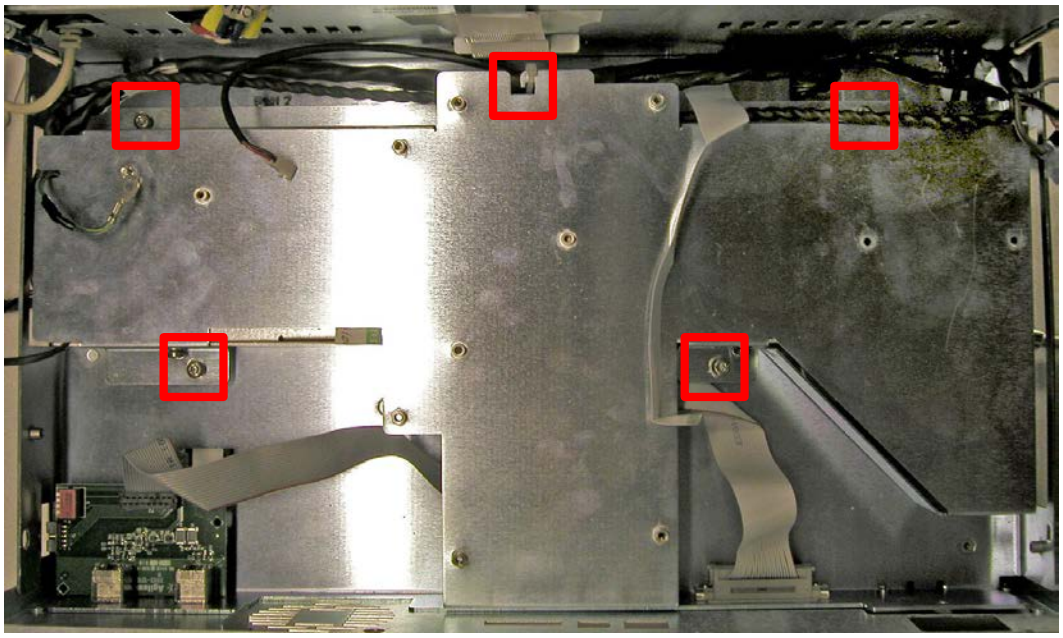

Figure 4-27. Boards removed for clarity

Step 6. Gently lift bulk shroud out of mainframe and place on right side of mainframe (non-handle side - right side when viewed from front)

Step 7. Carefully stand mainframe on its right end and remove three screws using a T10 driver from the side opposite to the backplane assembly.

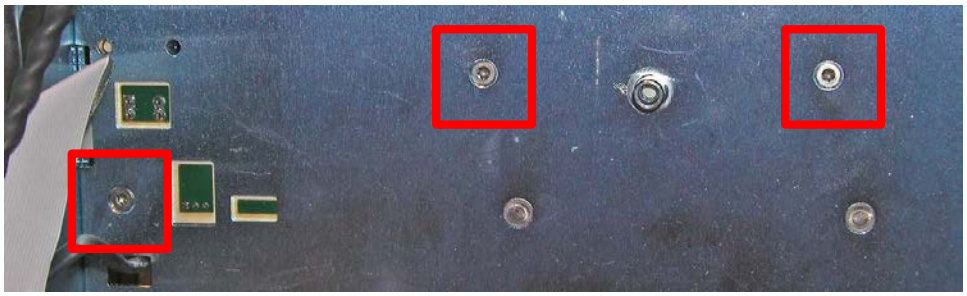

Figure 4-28

Step 8. Disconnect any remaining cables if required, and either cut or carefully slide the two push-on retainers off of the retaining pins

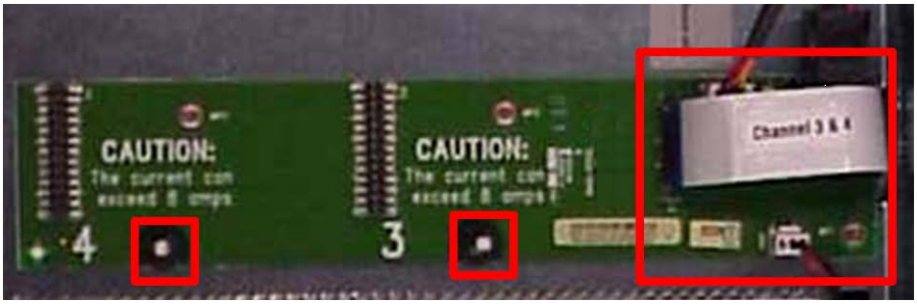

Figure 4-29

Step 9. Remove the backplane PCA.

Step 10. To install the bottom backplane PCA, perform steps 1-9 in reverse order. New push-on retainers can be purchases separately.

Removing/Installing the Sub Panel

Step 1. Remove the top chassis as previously described.

Step 2. Remove the bottom cover as previously described.

Step 3. Remove three screws using a T10 driver from the rear panel and remove the rear panel.

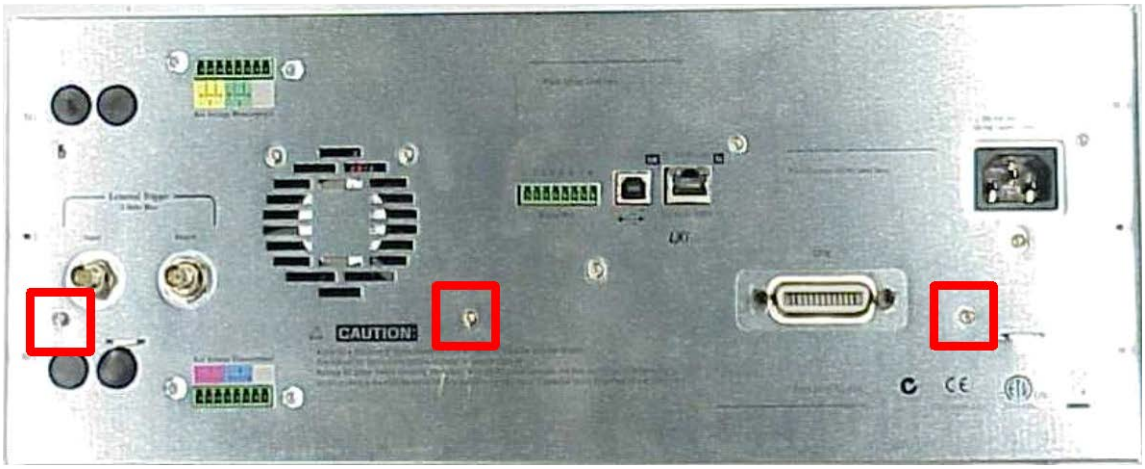

Figure 4-30

Step 4. Disconnect the USB Cable and front panel to PPMC FFC.

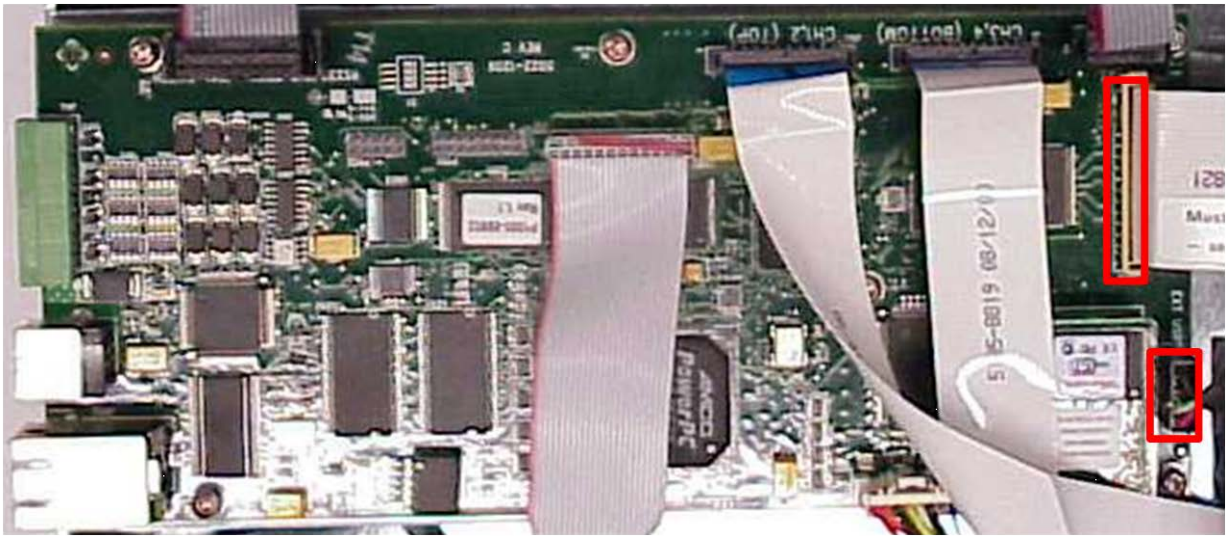

Figure 4-31

Step 5. Disconnect all cables to the AC switch on the rear bottom chassis, remove three screws using a T10 driver, and separate mainframe from front panel.

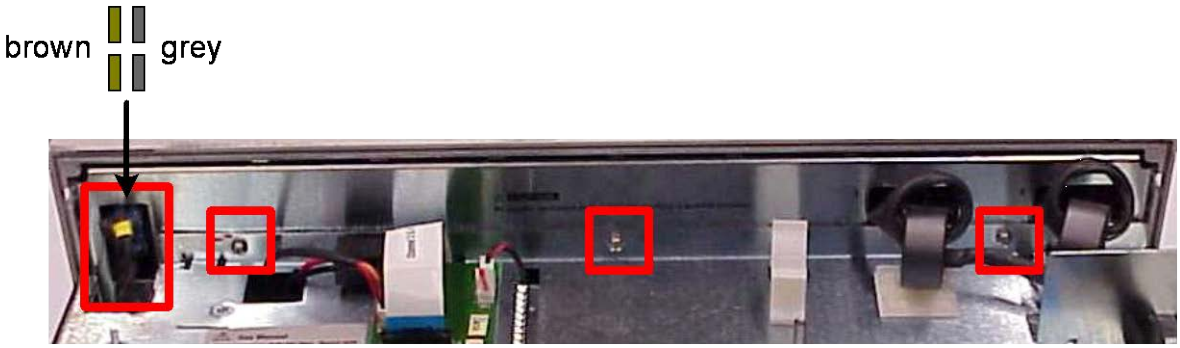

Figure 4-32

Step 6. Remove two screws using a T10 from each side of the front panel.

Figure 4-33

Step 7. Remove the sub panel.

Step 8. To install the sub panel, perform steps 1-7 in reverse order.

Removing/Installing the Display

Step 1. Remove the sub panel as previously described.

Step 2. Disconnect two cables and remove two screws using a T10 driver.

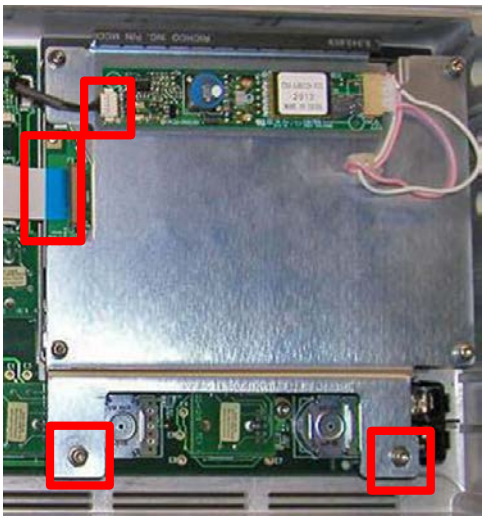

Figure 4-34

Step 3. Disconnect one cable and remove four screws using a T10 driver to remove display from bracket.

Figure 4-35

Step 4. To install the display, perform steps 1-3 in reverse order.

Removing/Installing the Binding Post PCA

Step 1. Remove the sub panel as previously described.

Step 2. Disconnect the binding post PCA to front panel PCA ribbon cable and remove sixteen 1/4 in. nuts from the assembly.

Figure 4-36

Step 3. Remove the binding post PCA.

Step 4. To install the binding post PCA, perform steps 1-3 in reverse order.

Removing/Installing the Front Panel PCA

Step 1. Remove the sub panel as previously described.

Step 2. Remove the display as previously described.

Step 3. Disconnect the binding post PCA to front panel PCA ribbon cable and remove seven screws using a T10 driver.

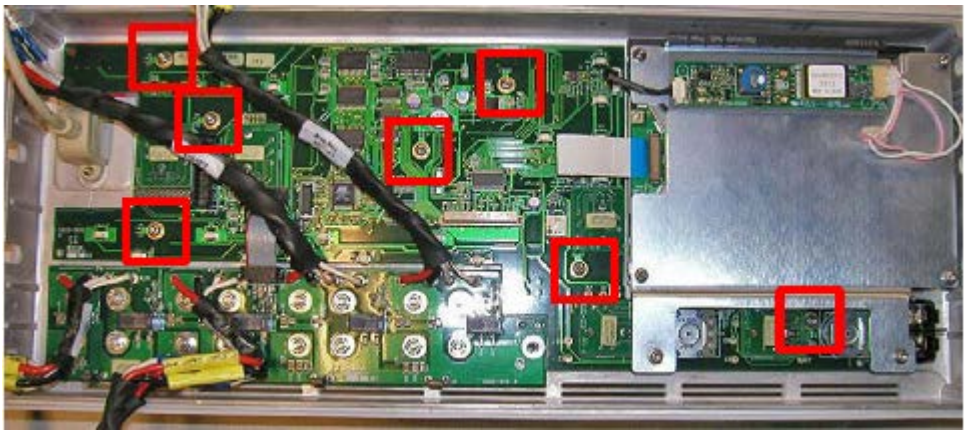

Figure 4-37

Step 4. Remove the seven knobs from the front panel.

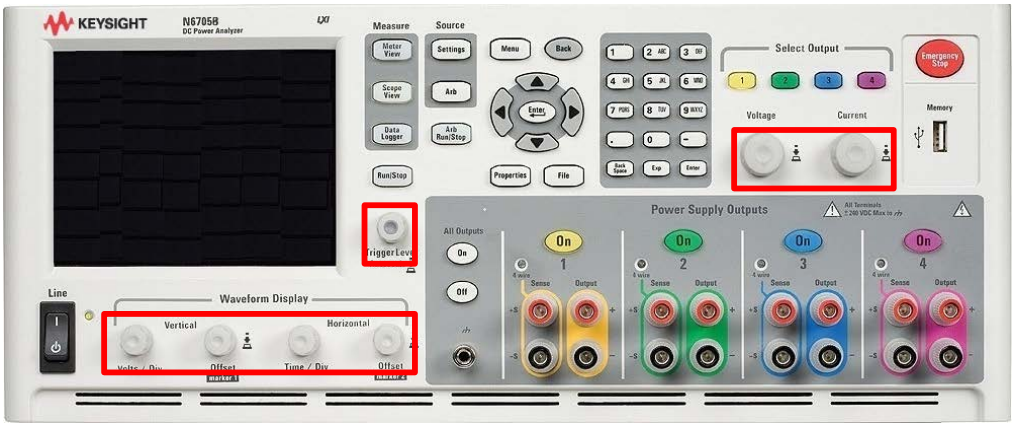

Figure 4-38

Step 5. Remove the front panel PCA.

Step 6. To install the front panel PCA, perform steps 1-5 in reverse order.

5
Troubleshooting

Preliminary Checkout 106
General Troubleshooting 107
Bias PCA Troubleshooting 112
Backplane PCA Troubleshooting 114
Calibration and Passwords 115
Initialization 115

Before performing the General Troubleshooting procedures, perform the Preliminary Checkout procedure in the beginning of this chapter.

If the Keysight N6705 DC Power Analyzer passes selftest and there are no obvious faults, perform the verification procedures in chapter 2 to determine if any power modules are not calibrated, or are not operating properly. This will help isolate a problem to a specific power module.

The following table documents the test equipment required for troubleshooting Keysight N6705 DC Power Analyzer mainframes.

Model	Description
Keysight 34401A or equivalent	Digital multimeter (for measuring voltage and resistance)

Preliminary Checkout

Is the instrument inoperative?

- Verify that the AC power cord is connected to the instrument.
- Verify that the front-panel On/Standby switch has been pushed.

Is the display working?

- If the display is hard to read, but the front-panel “line” LED is lit and the fans are working, the display contrast setting may be too light or too dark. Use the front panel menu to set the display contrast.

Does the instrument fail selftest?

- Remove all external connections to the instrument.
- Check that modules are installed next to each other, starting with slot 1. If there are any empty slots (or filler modules) *between* the power modules, the power system will not operate.
- Check that the mainframe has the latest firmware installed.
- Turn off the unit and cycle power to run selftest again.

If the supply passes selftest and there are no obvious faults, perform the verification procedures in Chapter 2 to determine if any functions are not calibrated, or are not operating properly.

Self-test Error List

The following table documents the self-test error messages. Refer to Appendix A for other error messages.

	Selftest Errors (these errors set Standard Event Status register bit #3)
202	Selftest Fail Aux Adc 0 expected <n1> to <n2>, measured <n3>, chan <n4> Auxiliary ADC failed. n1 and n2 are the expected limits. n3 is the measured value. n4 is the channel location of the failed module.
202	Selftest Fail DACs 0 expected <n1> to <n2>, measured <n3>, chan <n4> Both voltage and current DACs are at zero. n1 and n2 are the expected limits. n3 is the measured value. n4 is the channel location of the failed module.
202	Selftest Fail DACs 1 expected <n1> to <n2>, measured <n3>, chan <n4> Voltage DAC is at zero; current DAC is at full scale. n1 and n2 are the expected limits. n3 is the measured value. n4 is the channel location of the failed module.
202	Selftest Fail DACs 2 expected <n1> to <n2>, measured <n3>, chan <n4> Voltage DAC is at full scale; current DAC is at zero. n1 and n2 are the expected limits. n3 is the measured value. n4 is the channel location of the failed module.
202	Selftest Fail DACs 3 expected <n1> to <n2>, measured <n3>, chan <n4> Both voltage and current DACs are at full scale. n1 and n2 are the expected limits. n3 is the measured value. n4 is the channel location of the failed module.

General Troubleshooting

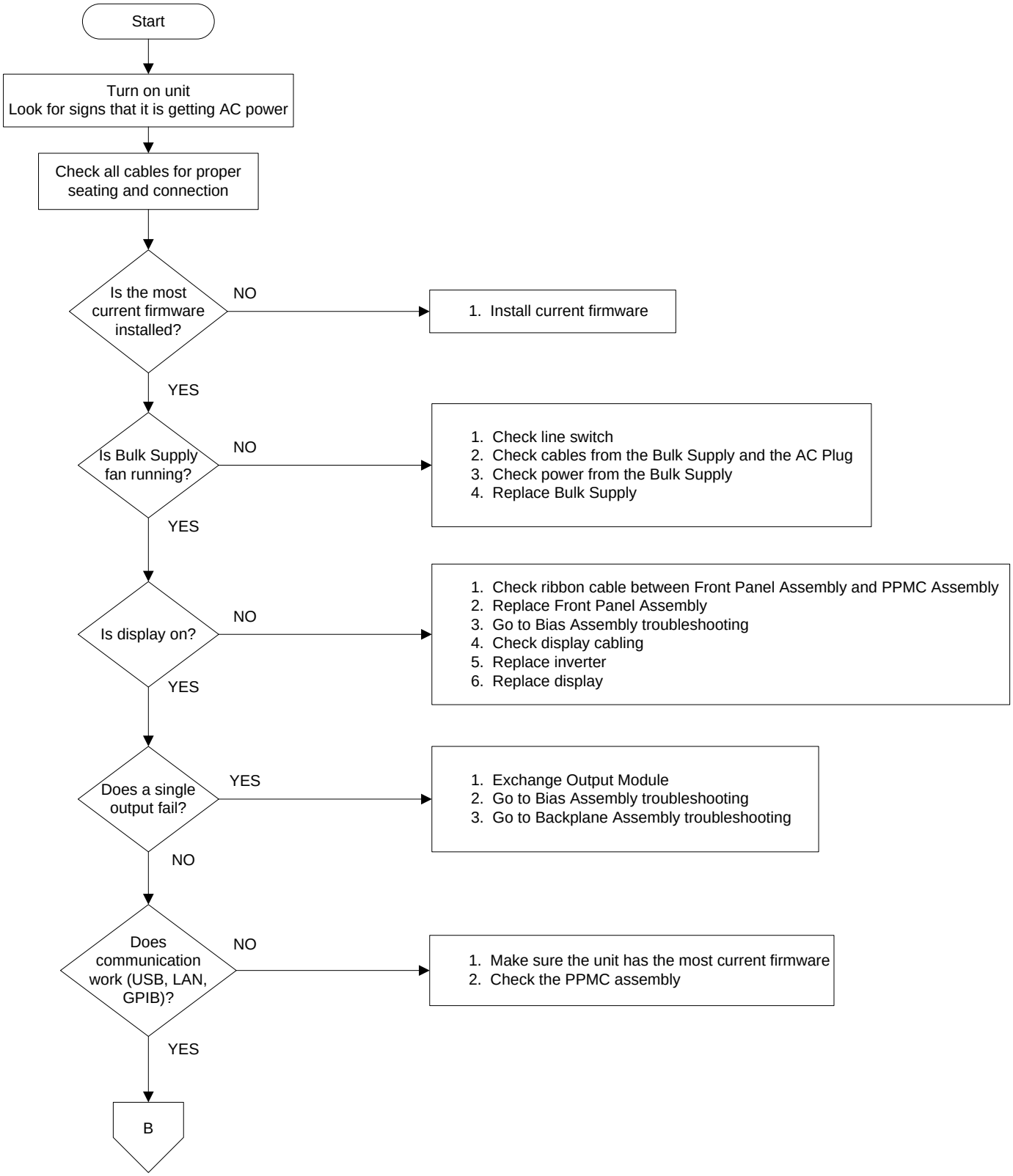

Figure 5-1. General Troubleshooting Sheet 1

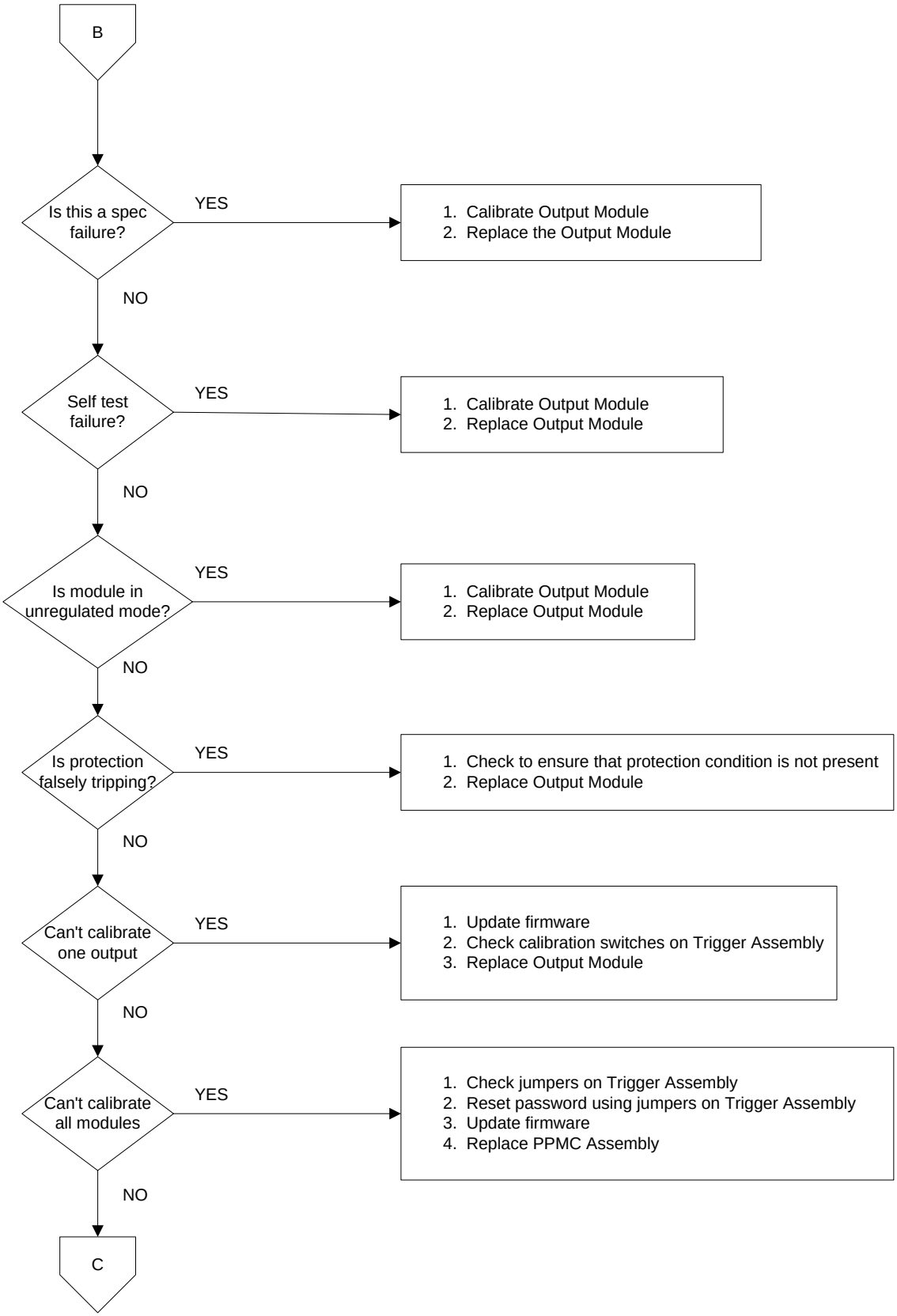

Figure 5-1. General Troubleshooting Sheet 2

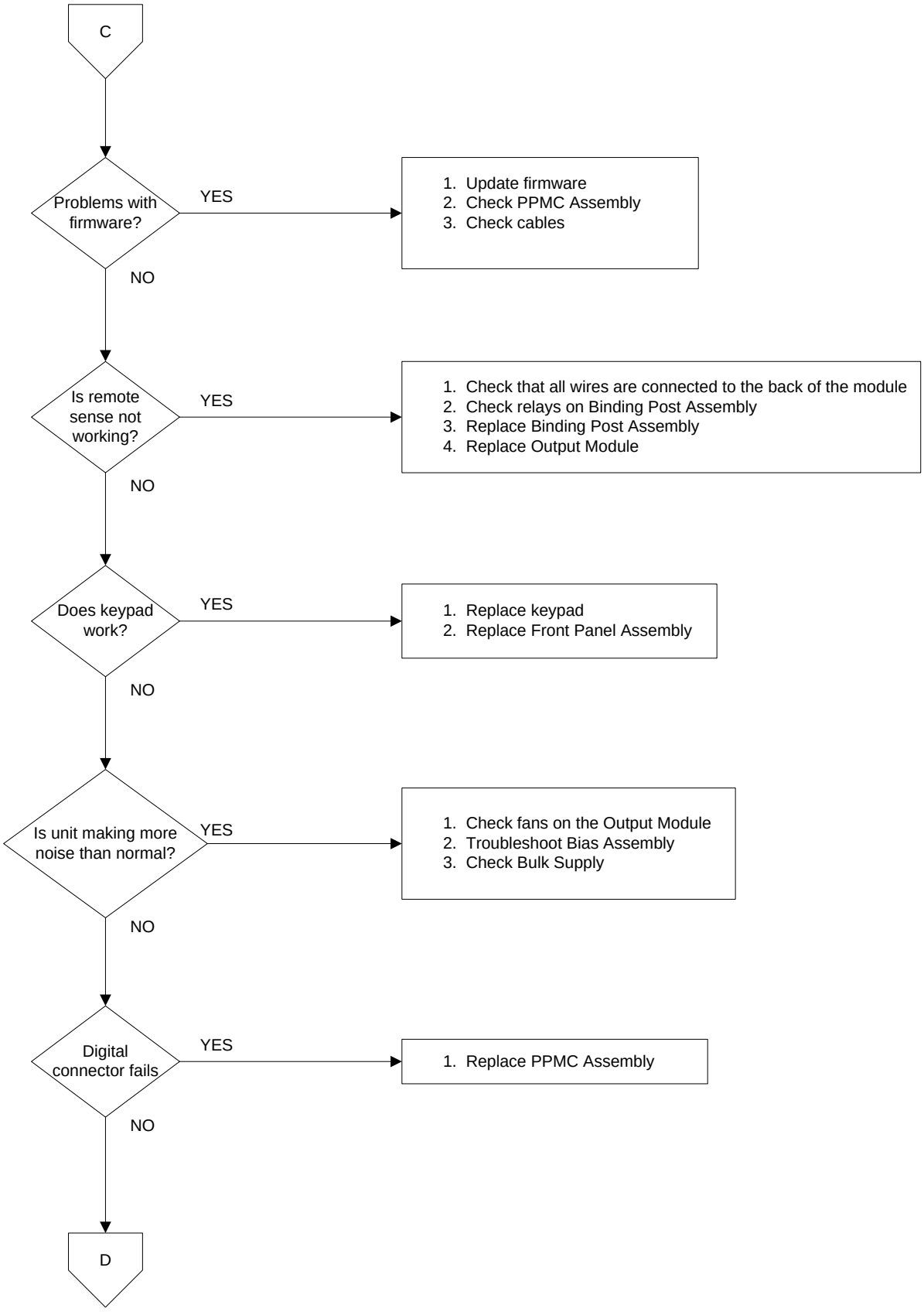

Figure 5-1. General Troubleshooting Sheet 3

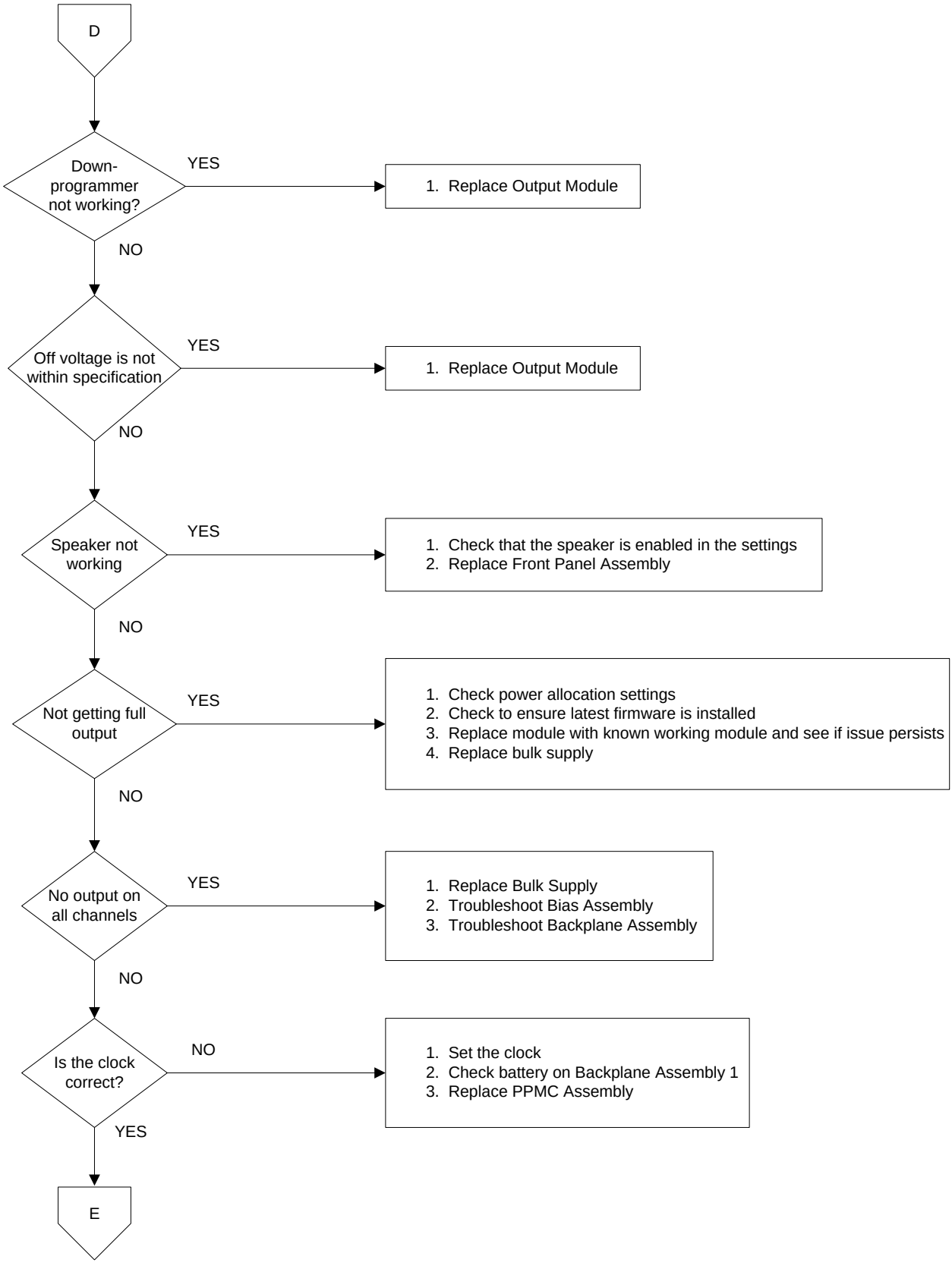

Figure 5-1. General Troubleshooting Sheet 4

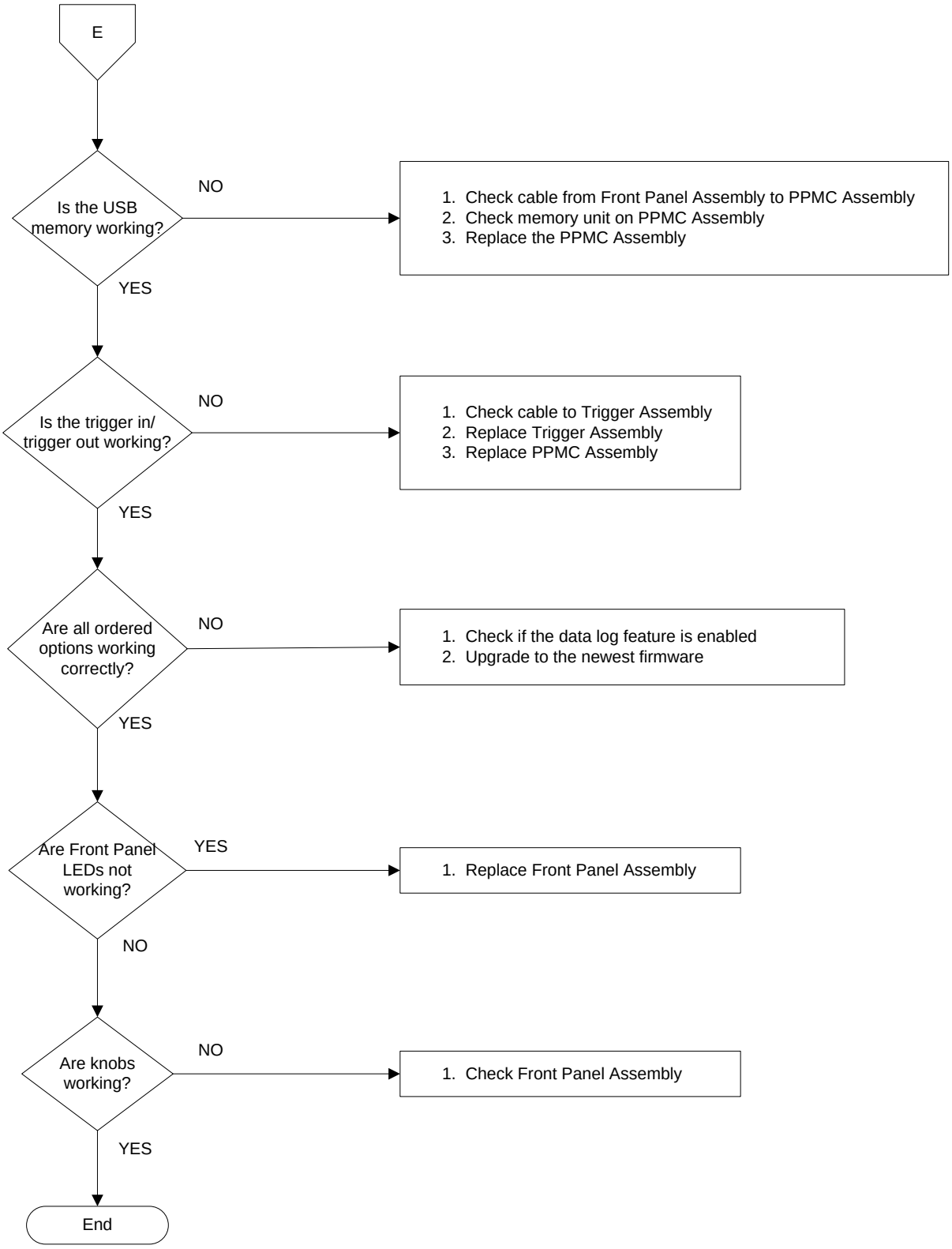

Figure 5-1. General Troubleshooting Sheet 5

Bias PCA Troubleshooting

Troubleshooting the bias board involves checking for the presence of the correct bias voltages on the board. Refer to the following table and figures.

Note that if the bias voltages at test points 2 - 4 in the following table are not present, it could be caused by a defect in the power module or interface board that is pulling the bias voltage low.

Test Point	Location	Voltage	Action
TP 1	+ RED	+48 V	Output of bulk supply. If not present, replace the bulk supply.
TP 2	+ C4	+12 V	If biases at TP 2, TP 3, or TP 4 are not present, disconnect the backplane and interface board cable assemblies and recheck. If biases are still not present, replace the bias board.
TP 3	U9 - 2	+5 V	Same as above.
TP 4	+ C3	+3.3 V	Same as above.
Common	– BLK	Common	

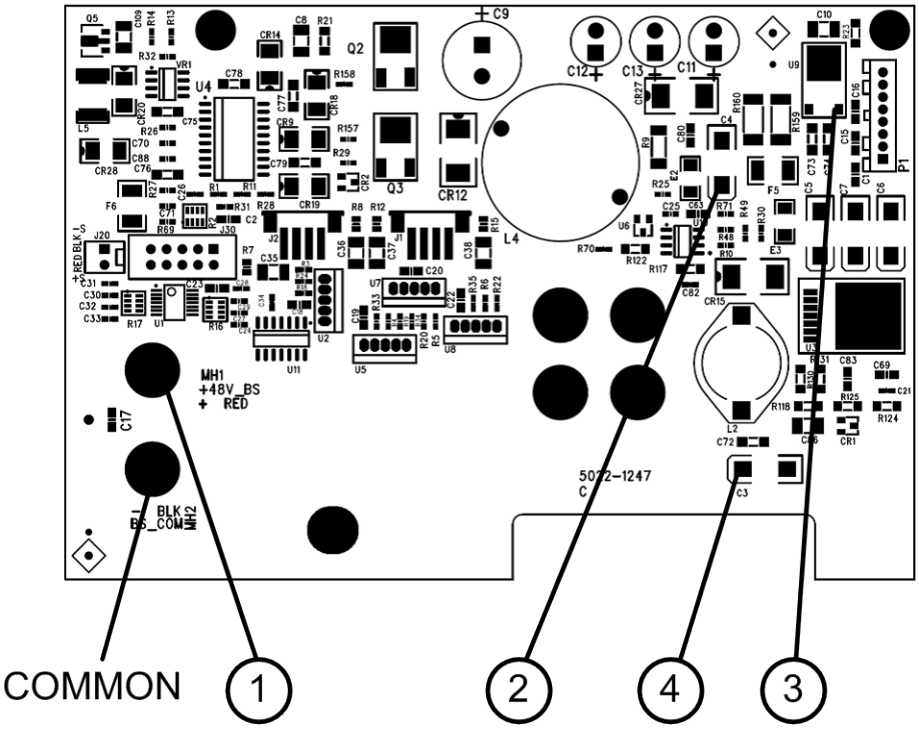

Figure 5-2. Bias Board Test Points

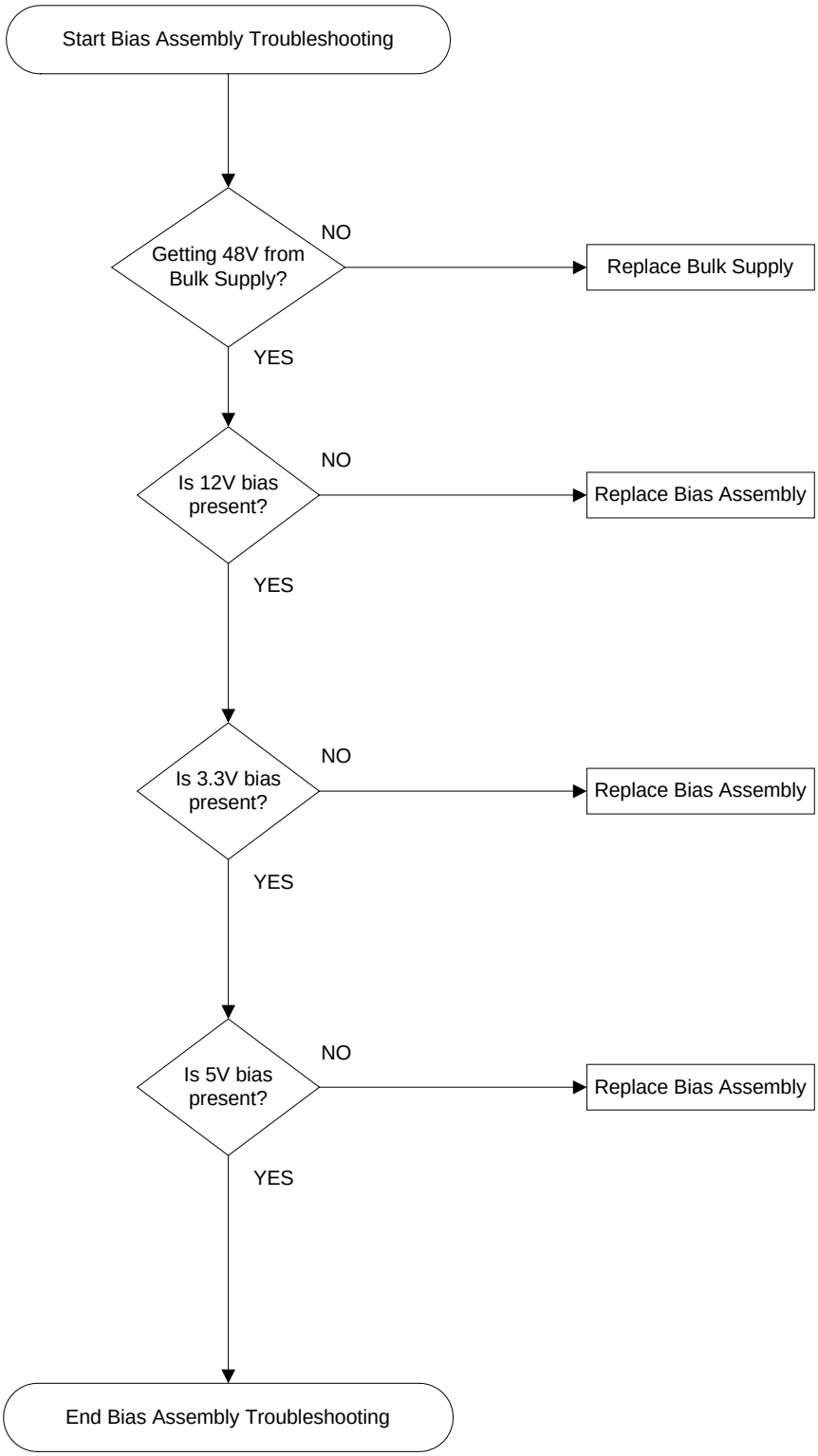

Figure 5-3. Bias PCA Troubleshooting Sheet 1

Backplane PCA Troubleshooting

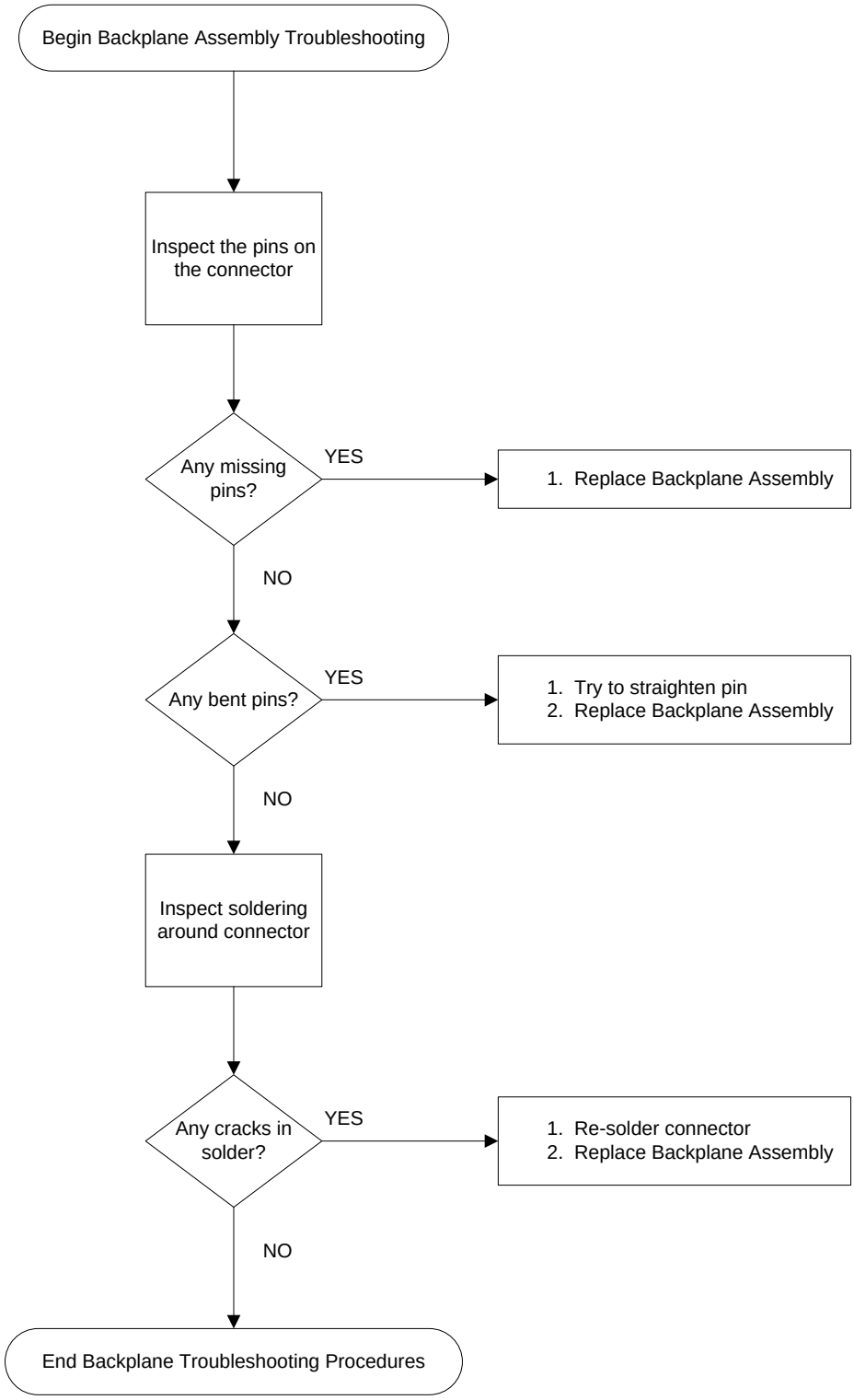

Figure 5-4. Backplane PCA Troubleshooting Sheet 1

Calibration and Passwords

Calibration is not required after the mainframe has been repaired. All calibration information is module-specific and resides in each power module.

However, if the PPMC PCA board that contains the calibration switches has been replaced, any calibration password that has been set will be lost. Passwords that are used to prevent access to the front panel Admin menu will also be lost.

The calibration password will automatically be reset to the factory default, which is zero (0). Front panel access to the Admin menu will be unrestricted unless a password is set.

Refer to the User's Guide for information on setting the calibration password as well as the Admin menu password.

Initialization

The power system's model number, serial number, and other constants that are required to program the instrument are stored in an EEPROM on the PPMC PCA board. If this board is replaced, the instrument must be re-initialized.

To initialize the power system, you must send the following information to the power system over the interface:

```
DIAGnostic:FRAMe:ATTRibute "ModelNumber", "value"
```

where "value" is the model number, e.g. N6705B.

```
DIAGnostic:FRAMe:ATTRibute "SerialNumber", "value"
```

where "value" is the serial number located on top of the interface cover.

At power-up, the power system will go through the turn-on self test sequence. All other parameters will be set to the factory defaults. The mainframe is now initialized.

6
Replaceable Parts

Parts List 118
Parts Location Diagrams 120

The following table documents the replaceable assembles and parts. The diagrams show the location of the parts.

Parts List

Reference Designator	Keysight N6705A	Keysight N6705B	Description
		Electrical Assemblies	
A1	N6705-60101	N6705-60101	Tested PPMC large PCA for the N6705
A2 *	N6705-60005	N6705-60005	Tested Bias PCA for N6705
A3	N6705-60103	N6705-60103	Tested Front Panel PCA for N6705
A4	N6705-60104	5067-4399	Tested Binding Post PCA for N6705
A5	N6705-60105	N6705-60105	Tested PWR-SPLY 1200W SINGLE-OUTPUT
A6	N6705-60106	N6705-60106	Tested PPMC w/o USB PCA for the N6705
		Individual Parts	
1	5002-2853	5002-2853	Side cover (qty 2)
2	5002-2855	5002-2855	Bottom cover
3	5002-2856	5002-2856	Top cover
4	5040-1741	5040-1741	Window
5	5040-1745	5040-1745	Keypad
6	54801-47401	54801-47401	12mm grey knob (qty 5)
7	54801-47402	54801-47402	18 mm grey knob (qty 2)
8	E3631-20011	E3631-20011	Red biding post (qty 8)
9	E3631-20012	E3631-20012	Black binding post (qty 8)
10	3101-4076	3101-4076	AC switch
11	54810-03702	54810-03702	Tilt stand
12	54810-61001	54810-61001	Foot assembly (qty 4)
13	5002-2851	5002-2897	Rear panel
14	5002-2852	5002-2852	Sub panel
15	1253-7050	1253-7050	AC plug
16	5002-2850	5002-2850	Chassis top
17	5002-2857	5002-2857	Deflector (qty 4)
18	5040-1742	5040-1742	Insulator backplane (qty 2)
19 *	5067-4307	5067-4307	Backplane 1 PCA
20 *	5067-4308	5067-4308	Backplane 2 PCA
21 *	5067-4312	5067-4312	Fan assembly
22	5040-1740	5040-1740	Bulk shroud
23	5040-1744	5040-1744	Top AC shroud
24	5185-8830	5185-8830	AC Shroud
25	5002-2849	5002-2849	Chassis bottom
26	5067-2522	5067-2522	Trigger PCA
27	5067-2562	5067-2562	ASSY-Inverter PCA and Bracket
28	2090-0943	2090-0943	Display
29	5040-1743	N6705-60006	Front frame
30	0510-1350	0510-1350	Push-on retainer

Reference Designator	Keysight N6705A	Keysight N6705B	Description
		Cables	
31	5185-8809	5185-8809	AC in to filter cable
32	E5810-61605	E5810-61605	GPIB and Cable
33	5185-8811	5185-8811	48 V Rail to Backplane 1 & 2 cable
34	5185-8812	5185-8812	Sense cable
35	5185-8813	5185-8813	Bias to PPMC cable
36	5185-8819	5185-8819 (2)	PPMC to Backplane 1; PPMC to Backplane 2
37	5185-8821	5185-8821	Display to front panel cable
38	5185-8810	5185-8810	Bulk supply to line switch cable
39	5185-8823	5185-8823	PPMC to front panel cable
40	N1912-61002	N1912-61002	Backlight cable assembly
41	5185-8824	5185-8824	Bulk supply ground wire
47	5067-4311 (2)	5067-4311 (2)	Bias to Backplane 1; Bias to Backplane 2
48	5185-8825	5185-8825	Filter to line switch cable
49	D8104-61602	D8104-61602	Front panel USB cable
50	N/A	5067-4385 (2)	Auxiliary Voltage PCA
51	N/A	9170-2264 (4)	Front panel cable inductor
52	N/A	0400-1009 (4)	Rear panel cable grommet
		Handle Assembly and Label	
42	E4400-40018	E4400-40018	End cap
43	E6601-21033	E6601-21033	Handle retainer
44	N6705-60002	N6705-60002	Strap handle
45	N6705-60003	N6705-60003	Strap insert
46	N6705-80001	N6705-80001	Mainframe label
* Part number for units without fan speed control			
A2	N6705-60102	Tested Bias PCA for N6705A	
19	5065-7094	Backplane 1 PCA	
20	5065-7095	Backplane 2 PCA	
21	5067-2520	Fan assembly	

Fan speed-control serial numbers

Automatic fan speed controls have been installed in all N6705A mainframes with the following serial numbers:

MY47000757 - MY47000758

MY47000765 - MY47000766

MY47000789 - MY47000793

MY47000804 and up

SG47000140 and up

All N6705B mainframes have automatic fan speed controls.

Parts Location Diagrams

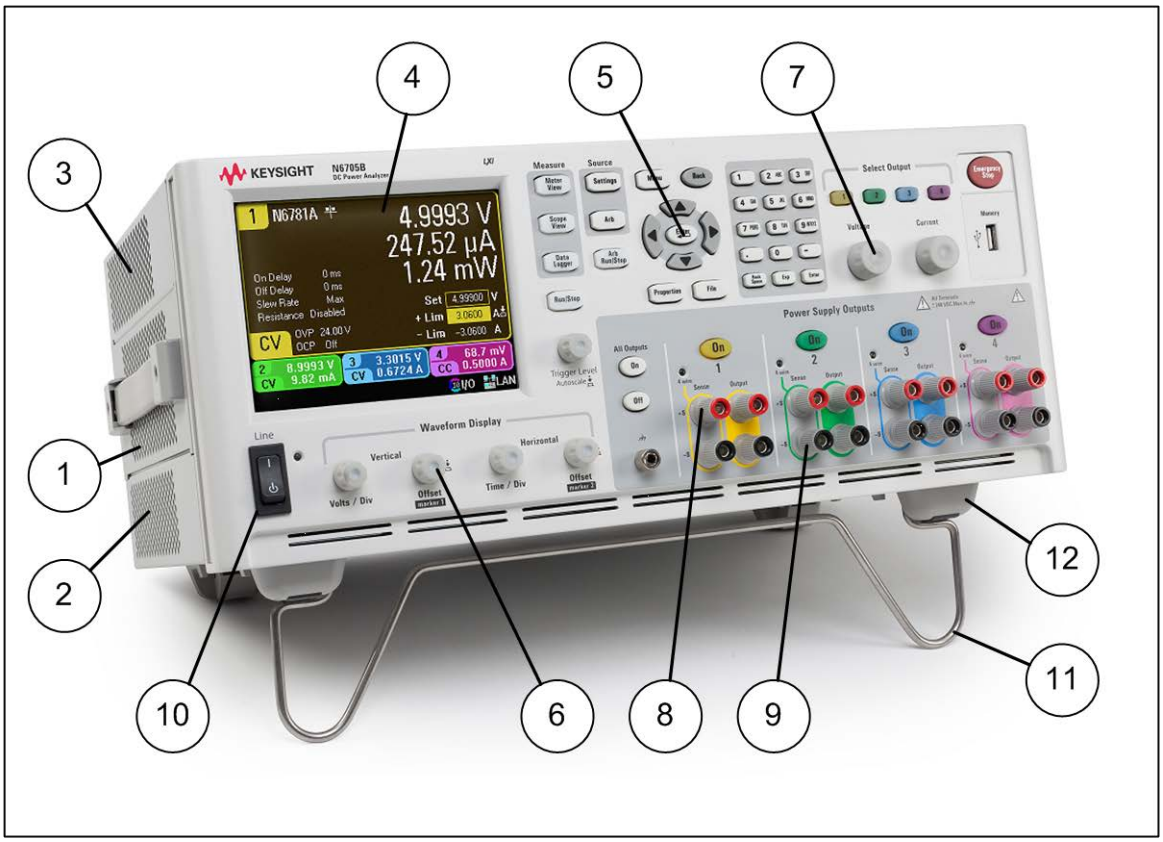

Figure 6-1. External Parts

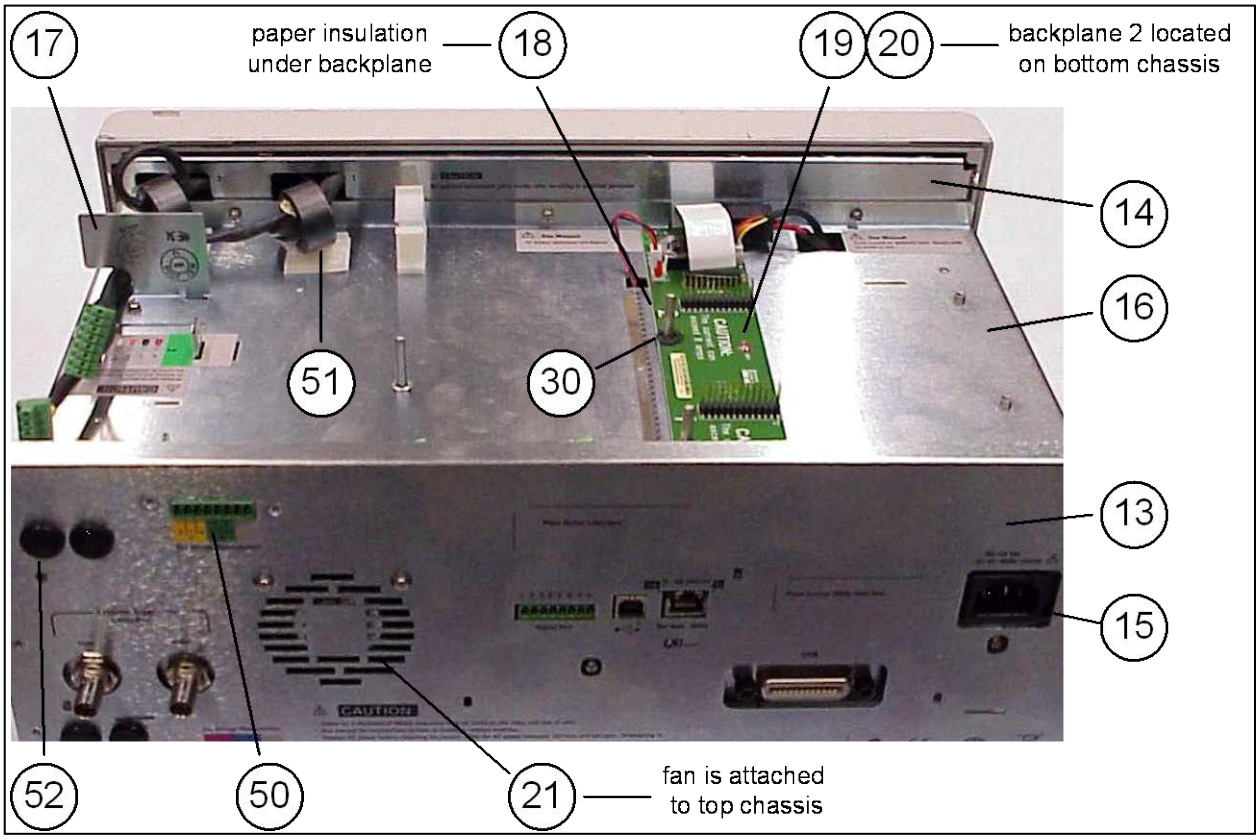

Figure 6-2. Top Cover Removed

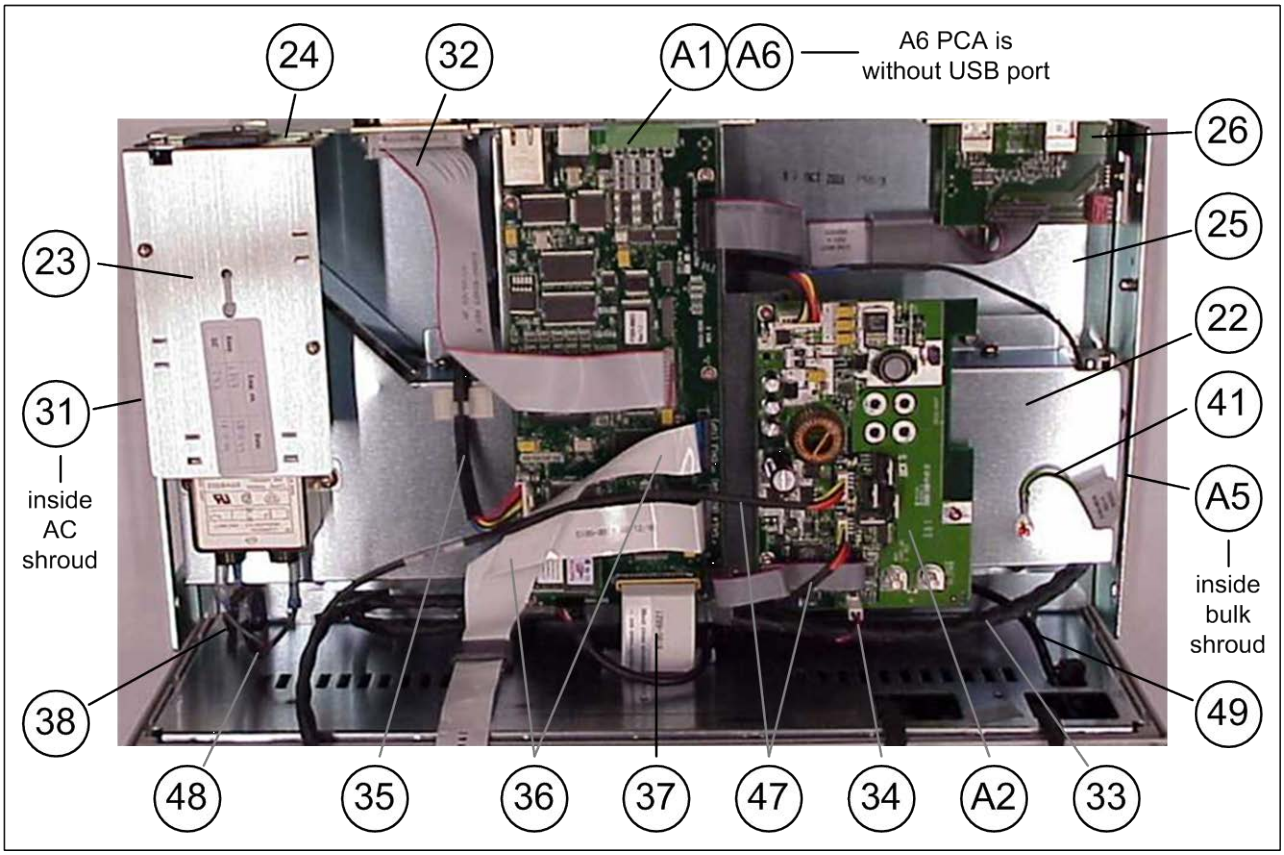

Figure 6-3. Top Chassis Removed

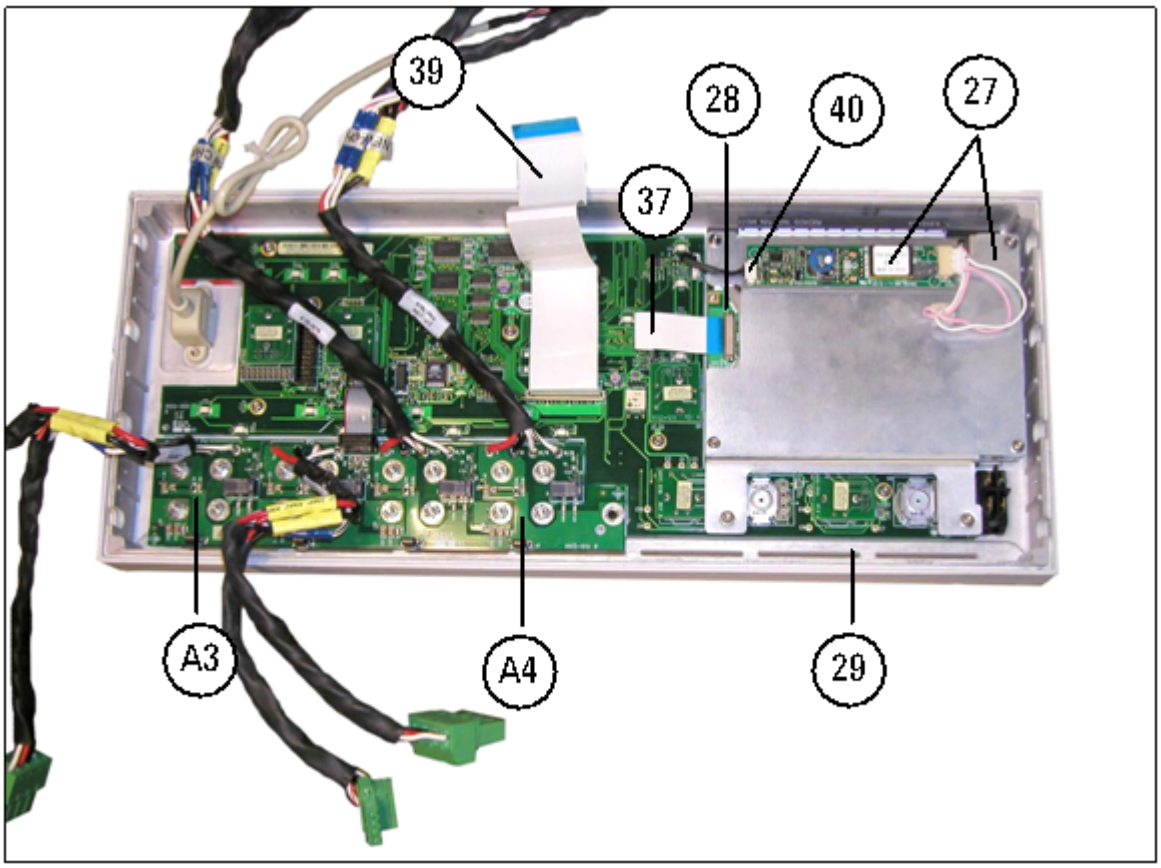

Figure 6-4. Front Panel

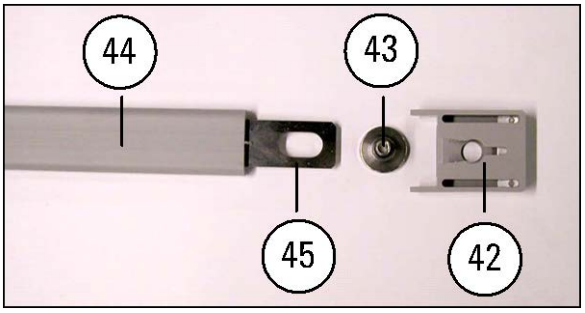

Figure 6-5. Handle Assembly

Appendix A
Error Messages

Displaying Error Messages.....126
Error List 126

This appendix gives the error numbers and descriptions that are returned by the Keysight N6705 DC Power Analyzer.

Error messages can be displayed on the front panel and also read back programmatically.

Displaying Error Messages

The instrument beeps each time a command syntax or hardware error is generated. The front-panel **ERR** annunciator turns on when one or more errors are currently stored in the SCPI error queue.

Front Panel:	SCPI Command:
Press the Error key. If errors appear, use the navigation keys to scroll though the list.	SYST:ERR?

Errors are cleared as they are read. When all errors have been read, the **ERR** annunciator turns off and the error queue is cleared.

Error List

Error	Device-dependent Errors (these errors set Standard Event Status register bit #3)
0	No error This is the response to the ERR? query when there are no errors.
100	Too many channels You have specified more channels than are installed in the mainframe.
101	Calibration state is off Calibration is not enabled. The instrument will not accept calibration commands.
102	Calibration password is incorrect The calibration password is incorrect.
103	Calibration is inhibited by switch setting Calibration mode is locked out by the calibration switch.
104	Bad sequence of calibration commands Calibration commands have not been entered in the proper sequence.
105	Unexpected output current The measured output current is outside the acceptable range.
106	Zero measurement out of range error The “zero” measurement value is outside the acceptable range.
107	Programming cal constants out of range The programmed calibration constant is outside the acceptable range.
108	Measurement cal constants out of range The measurement calibration constant is outside the acceptable range.
109	Over voltage cal constants out of range The over voltage calibration constant is outside the acceptable range.
110	Wrong V+I The instrument was unable to set the correct voltage or current value.
111	Aux vloc cal constants out of range Calibration constants on the internal auxiliary local ADC are outside the acceptable range.
112	Aux vrem cal constants out of range Calibration constants on the internal auxiliary remote ADC are outside the acceptable range.
113	Aux imon cal constants out of range Calibration constants on the internal auxiliary imon ADC are outside the acceptable range.
114	Wrong status An incorrect status function has been reported.

	Device-dependent Errors (continued)
115	Output track resistance out of range The output track resistance is out of range. Re-calibrate the output module.
116	Locked out by internal switch setting This function has been locked out by an internal switch in the mainframe.
117	Calibration error A calibration error has occurred. Do not save calibration constants. Try re-calibrating the unit.
200	Hardware error channel <channel> A hardware error has occurred on the specified channel.
201	Invalid configuration, empty slots There is an empty slot between modules. This configuration is not allowed.
202	Selftest Fail A selftest failure has occurred. See selftest failure list for details.
203	Compatibility function not implemented The requested compatibility function is not available.
204	NVRAM checksum error A checksum error has occurred in the instrument's nonvolatile random access memory.
205	NVRAM full The nonvolatile random access memory of the instrument is full.
206	File not found The internal calibration file or the internal channel attribute file was not found in NVRAM.
207	Cal file version error The calibration file was written or read using old firmware. Firmware must be updated.
208	Running backup firmware The instrument is presently running the backup (previous) version of the firmware.
209	Modules do not match group NV config One or more modules that have their output coupled do not match the instrument state settings.
210	Frame NVRAM error A non-volatile RAM error has occurred in the mainframe
211	Output state couple modules do not match One or more modules in the group does not match the non-volatile configurations settings.
302	Option not installed The option that is programmed by this command is not installed.
303	There is not a valid acquisition to fetch from There is no valid data in the measurement buffer.
304	Volt and curr in incompatible transient modes Voltage and current cannot be in Step and List mode at the same time.
305	A triggered value is on a different range A triggered value is on a different range than the one that is presently set.
306	Too many list points Too many list points have been specified.
307	List lengths are not equivalent One or more lists are not the same length.
308	This setting cannot be changed while transient trigger is initiated Setting cannot be changed while the instrument is waiting for or executing a trigger sequence.
309	Cannot initiate, voltage and current in fixed mode Cannot initiate the transient generator. Either the voltage or the current function is set to Fixed mode.
310	The command is not supported by this model This power modules either does not have the hardware capability or the options required to support this command.

	Device-dependent Errors (continued)
311	**This group of channel has non-identical features** One or more modules in this group does not match the ratings or options of the other modules.
312	**The command is disabled when the channel is grouped** This command is disabled when the output channel is grouped.
313	**Datalog time interval is out of range** The data log time interval is outside the programmable range.
314	**Time of day clock has stopped** The time of day clock has stopped. Replace the internal battery. See Service Guide.
315	**Settings conflict error** A data element could not be programmed because of the present instrument state.
316	**Mass storage error** The mass storage memory has been exceeded.
317	**Invalid format** An invalid data format was found in the command string.
318	**Datalog error** An error has occurred in the data returned by the datalogger.
319	**Measurement is not allowed while datalogger is running** You cannot make measurements in Meter View or Scope View while the datalogger is running.
320	**Firmware update error** This may be due to the instrument hardware not being able to support the firmware version.
321	**Modules do not match data format** One or more power modules does not match the data format of the file that is being loaded
322	**User defined arb error** An error has occurred in the format or the data of the user–defined arb.
323	**Meas TINTerval too small on too many channels** The measurement time interval is too small to be supported by the number of channels.
324	**Inconsistent arb settings** The arb settings are inconsistent; most likely a mismatch in the arb lengths.
325	**Arb sequence error** An error has occurred with the arb sequence.
326	**Not supported by emulation mode** The function/parameter is not supported by the specified emulation mode.
327	**Initiated with no sense function enabled** A measurement has been initiated without specifying the measurement (sense) function.
328	**Too many measurement points** Too many measurement points have been specified.
	Command Errors (these errors set Standard Event Status register bit #5)
–100	**Command error** Generic syntax error.
–101	**Invalid character** An invalid character was found in the command string.
–102	**Syntax error** Invalid syntax was found in the command string. Check for blank spaces.
–103	**Invalid separator** An invalid separator was found in the command string. Check for proper use of , ; :
–104	**Data type error** A different data type than the one allowed was found in the command string.
–105	**GET not allowed** A group execute trigger is not allowed in a command string.

	Command Errors (continued)
–108	Parameter not allowed More parameters were received than were expected.
–109	Missing parameter Fewer parameters were received than were expected.
–110	Command header error An error was detected in the header.
–111	Header separator error A character that was not a valid header separator was found in the command string.
–112	Program mnemonic too long The header contains more than 12 characters.
–113	Undefined header A command was received that was not valid for this instrument.
–114	Header suffix out of range The value of the numeric suffix is not valid.
–120	Numeric data error Generic numeric data error.
–121	Invalid character in number An invalid character for the data type was found in the command string.
–123	Exponent too large The magnitude of the exponent was larger than 32000.
–124	Too many digits The mantissa of a numeric parameter contained more than 255 digits, excluding leading zeros.
–128	Numeric data not allowed A numeric parameter was received but a character string was expected.
–130	Suffix error Generic suffix error
–131	Invalid suffix A suffix was incorrectly specified for a numeric parameter.
–134	Suffix too long The suffix contains more than 12 characters.
–138	Suffix not allowed A suffix is not supported for this command.
–140	Character data error Generic character data error
–141	Invalid character data Either the character data element contains an invalid character, or the element is not valid.
–144	Character data too long The character data element contains more than 12 characters.
–148	Character data not allowed A discrete parameter was received, but a string or numeric parameter was expected.
–150	String data error Generic string data error
–151	Invalid string data An invalid character string was received. Check that the string is enclosed in quotation marks.
–158	String data not allowed A character string was received, but is not allowed for this command.
–160	Block data error Generic block data error
–161	Invalid block data The number of data bytes sent does not match the number of bytes specified in the header.

	Command Errors (continued)
–168	Block data not allowed Data was sent in arbitrary block format but is not allowed for this command.
–170	Expression error Generic expression error
–171	Invalid expression data The expression data element was invalid.
–178	Expression data not allowed Expression data element was sent but is not allowed for this command.

	Execution Errors (these errors set Standard Event Status register bit #4)
–200	Execution error Generic syntax error
–220	Parameter error A data element related error occurred.
–221	Settings conflict A data element could not be executed because of the present instrument state.
–222	Data out of range A data element could not be executed because the value was outside the valid range.
–223	Too much data A data element was received that contains more data than the instrument can handle.
–224	Illegal parameter value An exact value was expected but not received.
–225	Out of memory The device has insufficient memory to perform the requested operation.
–226	Lists not same length One or more lists are not the same length.
–230	Data corrupt or stale Possible invalid data. A new reading was started but not completed.
–231	Data questionable The measurement accuracy is suspect.
–232	Invalid format The data format or structure is inappropriate.
–233	Invalid version The version of the data format is incorrect to the instrument.
–240	Hardware error The command could not be executed because of a hardware problem with the instrument.
–241	Hardware missing The command could not be executed because of missing hardware, such as an option.
–260	Expression error An expression program data element related error occurred.
–261	Math error in expression An expression program data element could not be executed due to a math error.

	Query Errors (these errors set Standard Event Status register bit #2)
–400	Query Error Generic error query
–410	Query INTERRUPTED A condition causing an interrupted query error occurred.
–420	Query UNTERMINATED A condition causing an unterminated query error occurred.
–430	Query DEADLOCKED A condition causing a deadlocked query error occurred.
–440	Query UNTERMINATED after indefinite response A query was received in the same program message after a query indicating an indefinite response was executed.

	Selftest Errors (these errors set Standard Event Status register bit #3)
202	Selftest Fail Aux Adc 0 expected <n1> to <n2>, measured <n3>, chan <n4> Auxiliary ADC failed. n1 and n2 are the expected limits. n3 is the measured value. n4 is the channel location of the failed module.
202	Selftest Fail DACs 0 expected <n1> to <n2>, measured <n3>, chan <n4> Both voltage and current DACs are at zero. n1 and n2 are the expected limits. n3 is the measured value. n4 is the channel location of the failed module.
202	Selftest Fail DACs 1 expected <n1> to <n2>, measured <n3>, chan <n4> Voltage DAC is at zero; current DAC is at full scale. n1 and n2 are the expected limits. n3 is the measured value. n4 is the channel location of the failed module.
202	Selftest Fail DACs 2 expected <n1> to <n2>, measured <n3>, chan <n4> Voltage DAC is at full scale; current DAC is at zero. n1 and n2 are the expected limits. n3 is the measured value. n4 is the channel location of the failed module.
202	Selftest Fail DACs 3 expected <n1> to <n2>, measured <n3>, chan <n4> Both voltage and current DACs are at full scale. n1 and n2 are the expected limits. n3 is the measured value. n4 is the channel location of the failed module.

Index

A

AC module
  removing/installing 91

B

backplane PCA..... 114
  bottom removing/installing 96
  top removing/installing..... 95
battery
  replacing 86
bias PCA..... 112
  removing/installing 89
binding post PCA
  removing/installing 102
bulk supply
  removing/installing 92

C

calibration 44
  current downprogrammer 73
  current programming and measurement 47, 50, 56, 67, 76
  enable..... 43, 46, 53
  equipment 10
  low range current measurement . 58, 69, 70, 71, 77
  low range current programming 57, 68
  low range voltage measurement 55, 63, 66
  low range voltage programming .. 54, 62, 65, 72
  password 79
  peak current limit..... 51, 59
  post repair 115
  save and exit 48, 52, 60, 74, 78
  switches 44, 85
  voltage programming and measurement 46, 49, 53, 61, 75
Caution..... 3
CC
  load effect 19
  source effect 20
contact numbers..... 5
current
  monitoring resistor..... 11
  programming accuracy..... 18
  readback accuracy..... 18

CV
  load effect.....14
  noise 15
  source effect 14

D

disassembly 82, 83
  AC module 91
  bias PCA 89
  binding post PCA.....102
  bottom backplane PCA.....96
  bulk supply 92
  display.....101
  front panel PCA 103
  parts location.....120
  PPMC (interface) PCA.....90
  sub panel 99
  tools 82
  top backplane PCA 95
  top chassis.....87
  trigger assembly.....94
display
  removing/installing 101

E

electronic load.....11
electrostatic discharge precautions.....6, 82
error codes 126
  displaying.....126
  selftest 106

F

firmware upgrade 7
flat flexible cables (FFC).....84
front panel PCA
  removing/installing 103

H

history.....2

I

initialization
  post repair 115
installing modules 83
instrument
  identification 6, 7

O

operating checklist 6

P

password
  calibration 44
  post repair 115
PPMC (interface) PCA
  removing/installing 90
preliminary checklist 106
print date 2

R

removing modules 83
repackaging 6
replaceable parts
  location 120
returning units 6

S

safety 3
selftest errors 106

sub panel
  removing/installing 99

T

top chassis
  removing/installing 87
transient recovery time 16
trigger assembly
  removing/installing 94
troubleshooting
  backplane PCA 114
  bias PCA 112
  general 107

V

verification 22
  equipment 10
  procedure 13, 18
voltage
  programming accuracy 13
  readback accuracy 13

W

Warning 3
Web URL's 5

This information is subject to change without notice.
© Keysight Technologies 2007 - 2015
Printed in Malaysia Edition 10, January 2015
N6705-90010
www.keysight.com